Illustrated Parts Catalogue

Revision 07 / 13

www.cameronballoons.co.uk

Everything you'll need to identify, order and replace

Customer Name:

Address:

email:

tel: fax:

VAT REG No (if applicable):

DESPATCH INSTRUCTION

UK: ☐ 1 - 2 Days ☐ 3 - 5 Days

Europe: ☐ 1 - 2 Days ☐ 3 Days ☐ 5 Days

Rest of the World: ☐ 3 - 5 Days

PAYMENT METHOD

Credit Card ☐ Cheque ☐ Account ☐ Cash ☐

Card Number:

Visa ☐ Solo ☐ Mastercard ☐ Maestro ☐

Card Expiry: Issue No: Security No:

Cardholders Name:

Cardholders Address (if different):

ORDER FORM

Qty	Part No	Description	Price
1	EASA	FORM1 Yes ☐ No ☐	£8 (€10)

Internal Ref Only:

Sales Person / Dealer:

Date Received: Date Scheduled:

Customer Order No: Original ☐ Revised ☐

Deposit: Currency:

aftersales@cameronballoons.co.uk fax: +44(0)117 966 1168

CAMERON BALLOONS LTD

St.Johns Street, Bedminster, Bristol, BS3 4NH UK

INTRODUCTION

Welcome to the Cameron Balloons Ltd Illustrated Parts Catalogue.

Photos and illustrations contained within this manual have been compiled for the sole purpose of assisting identification and ordering of spare parts and accessories. It is intended for reference purposes only. All images are not to scale.

Each item within this Catalogue has a dedicated Parts Number. This number must be quoted when ordering. Further information such as model, serial number, size, master or standard cylinder and colour may be required. If you can not find an item within this Parts Catalogue, please contact aftersales@cameronballoons.co.uk for further assistance.

Cameron Balloons Ltd reserve the right to change, substitute or delete any parts illustrated in this manual without prior notice. Not all parts illustrated are held in stock and may have to be ordered especially.

For maintenance and repair instruction of Cameron and Thunder & Colt baskets, burners and fuel systems, please refer to the latest revision of the Cameron Balloons Maintenance Manual. This can be downloaded from www.cameronballoons.co.uk

For burners and fuel cylinders not listed within the Maintenance Manual, please contact Cameron Balloons Ltd for the applicable manuals and advice.

Authorisation to perform maintenance and repair is given in all cases by the National Civil Aviation Authority in accordance with their regulations.

Cameron Balloons Ltd accepts no responsibility for either the incorrect identification of parts or the fitting of any parts by anyone other than its qualified employees.

Copyright of this manual and its illustrations is solely property of Cameron Balloons Ltd.

No unauthorised use or reproduction of this manual is permitted without permission in writing from the copyright holder.

SECTION	CONTENT
S1	BURNER & FRAME ACCESSORIES
S2	SHADOW/STEALTH / SINGLE / MINI BURNER
S3	STRATUS BURNER
S4	SIROCCO/SIROCCO 'EP' BURNER
S5	MK 4 SUPER BURNER
S6	COLT MKII / C2 BURNER
S7	C2 PLUS BURNER
S8	COLT MKIII / C3 BURNER
S9	MAGNUM / C3T BURNER
S10	FUEL SYSTEM - REFUELLING FUEL SYSTEM - MISCELLANEOUS ALUGAS FUEL CYLINDERS WORTHINGTON FUEL CYLINDERS DUPLEX FUEL CYLINDERS
S11	INFLATION FANS

BURNER & FRAME ACCESSORIES

Item No.	Description	Part No.
1	GIMBAL BLOCK ASSEMBLY (DOUBLE)	CB-2950-2000
2	GIMBAL BLOCK ASSEMBLY (TRIPLE/QUAD)	CB-2950-1000
3	M8 AEROTIGHT NUT, STAINLESS STEEL	CY-0008-1004
4	M8 PLAIN WASHER, STAINLESS STEEL	CY-0008-2008
5	GIMBAL BLOACK WEAR PAD	CB-8626-0000
6	GIMBAL BLOCK STUD, DOWEL PIN M10 X 26	CB-8570-0000
7	GIMBAL BLOCK SPRING DISC WASHER	CB-8603-0000
8	M6 X 16 CAP HEAD BOLT HEX SOCKET	CY-0006-3016
9	M5 SPRING WASHER	CY-0005-2007
10	FRAME - POLE SOCKETS	CB-0211-0000
11	NYLON BUSHES (PKT OF 8)	CB-0212-2000
12	DOMENUT & BOLT (PKT OF 4)	CU-1006-4050
13	FRAME - BOLT/NUT/WASHER	CU-1008-0065
14	SADDLE - Ø19mm TUBE (PLEASE SPECIFY - 4.76, 6.35, 11.11 OR 15.9mm) Ø25mm TUBE (PLEASE SPECIFY - 4.76, 6.35 OR 11.11mm)	CB-0543-0004
15	BRASS SPACERS - Ø19mm TUBE (PLEASE SPECIFY - 1.5mm, 3mm, 5mm, 6.5mm OR 8mm) Ø25mm TUBE (PLEASE SPECIFY - 1.5mm, 3mm, 5mm, 6.5mm OR 8mm)	CB-0735-0001
16	ADJUSTABLE FRAME KNOB	CB-0855-0002
17	SADDLE - OUTER	CB-2068-2000
18	SADDLE - INNER	CB-2068-0001
19	GAS STRUT - SINGLE	CB-2224-0003
20	GAS STRUT - DOUBLE	CB-2204-0003
21	HEATSHIELD SCREW	CB-3142-0001
22	HEATSHIELD WASHER	CB-3142-0002
23	ADJUSTABLE FRAME BOLT	CB-2891-0000
24	ADJUSTABLE FRAME LEVER	CB-2204-0004
25	STRUT PIVOT PIN	CB-8886-0000
26	FRICTION DISC Ø19mm OR Ø25mm (PLEASE SPECIFY)	CB-0551-0002
27	LOCTITE SCREW LOCK 222	CU-0000-0001
28	LOCTITE 270 - 10ml	CU-0000-0002
29	LOCTITE NUT LOCK 243	CU-0000-0003
30	LEAK DETECTING SOLUTION	CU-0000-0004
31	SILIGLIDE AEROSOL	CU-0000-0005
32	LOCTITE 572	CU-0000-0006
33	CAMERON KSP125 - 4.5ml	CU-0000-0010
34	PTFE TAPE	CU-0000-0007
35	PTFE PASTE	CU-0000-0008
36	NUT & BOLT FOR FLEXI CORNER FRAME	CU-1006-0050

Gimbal Block Assembly

Current Style

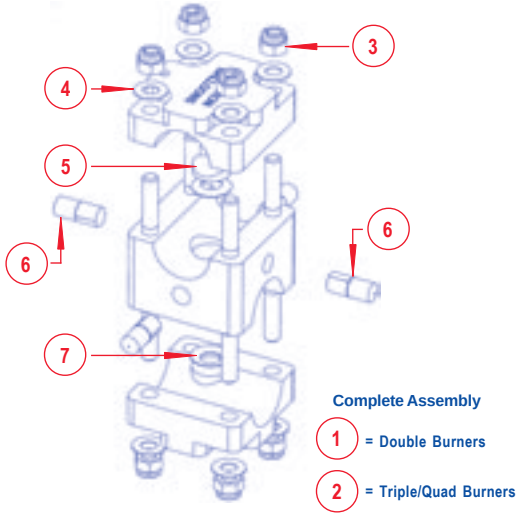

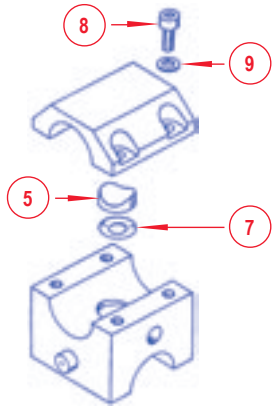

Old Style

No longer available
Main Body & Caps Superseded

Not all parts illustrated are held in stock and may have to be ordered especially - Please contact aftersales@cameronballoons.co.uk for any further information or advice.

BURNER & FRAME ACCESSORIES

Gimbal Block Assembly and Frame Accessories

1 CB-2950-2000 (DOUBLE)	2 CB-2950-1000 (TRIPLE/QUAD)	3 CY-0008-1004	4 CY-0008-2008	5 CB-8626-0000	6 CB-8570-0000	7 CB-8603-0000
		8 CY-0006-3016	9 CY-0005-2007	10 CB-0211-0000	11 CB-0212-2000	12 CU-1006-4050
13 CU-1008-0065	14 CB-0543-0004 PLEASE SPECIFY TUBE Ø	15 CB-0735-0001 PLEASE SPECIFY TUBE Ø	16 CB-0855-0002	17 CB-2068-2000 OUTER	18 CB-2068-0001 INNER	19 CB-2224-0003
					20 CB-2204-0003	21 CB-3142-0001
22 CB-3142-0002	23 CB-2891-0000	24 CB-2204-0004	25 CB-8886-0000	26 CB-0551-0002 PLEASE SPECIFY TUBE Ø	27 CU-0000-0001	28 CU-0000-0002
					29 CU-0000-0003	30 CU-0000-0004
31 CU-0000-0005	32 CU-0000-0006	33 CU-0000-0010	34 CU-0000-0007	35 CU-0000-0008	36 CU-1006-0050	

Not all parts illustrated are held in stock and may have to be ordered especially - Please contact aftersales@cameronballoons.co.uk for any further information or advice.

STEALTH / SHADOW / SINGLE / MINI

Item No.	Description	Part No.
1	AMAL MAIN JET	CB-0214-0003
2	COPPER WASHER	CB-0214-0006
3	3/8 BSP SEALING RING - OUTER	CB-0392-0021
4	3/8 BSP SEALING RING - INNER	CB-0392-0022
8	MULTI HOLE MAIN JET	CB-0923-0001
9	DOUBLE MANIFOLD GASKET	CB-2005-0020
10	STEALTH BURNER MANIFOLD (RIGHT HAND)	CB-2006-1000
11	STEALTH BURNER MANIFOLD (LEFT HAND)	CB-2006-2000
12	STEALTH BURNER INNER FOIL	CB-2009-0020
13	STEALTH BURNER OUTER FOIL	CB-2009-0021
15	PIEZOELECTRIC IGNITION ASSEMBLY	CB-2011-0001
16	SPARKER GASKET	CB-2011-0003
17	BLAST VALVE HANDLE ASSEMBLY - INC. HANDLE, CAM & SCREW (RED)	CQ-2022-0000
18	WHISPER VALVE HANDLE ONLY (BLUE)	CB-2015-2000
19	PILOT VALVE HANDLE ONLY (GOLD)	CB-2015-3000
20	SLEEVE	CB-2015-4000
22	UPPER CAM (INCLUDES INNER WASHER - RIGHT HAND)	CB-2016-1000
23	UPPER CAM (INCLUDES INNER WASHER - LEFT HAND)	CB-2016-2000
24	LOWER CAM (RIGHT HAND)	CB-2016-3000
25	LOWER CAM (LEFT HAND)	CB-2016-4000
26	WHISPER VALVE LOWER BODY	CB-2017-0000
28	WHISPER VALVE UPPER BODY	CB-2018-2019
29	WHISPER VALVE STEM	CB-2020-0000
30	PILOT LIGHT CAM (RIGHT HAND)	CB-2021-0001
31	PILOT LIGHT CAM (LEFT HAND)	CB-2021-0002
32	PILOT LIGHT VALVE STEM	CB-2022-0000
35	REGULATOR UPPER BODY (STANDARD)	CB-2026-1000
36	COVER STRIP & SCREW	CB-2026-0002
38	BLAST VALVE STEM ASSEMBLY	CB-2029-0000
42	BLANKING PLUG (INCLUDES SEAL KIT D - SEE ITEM 92)	CB-2033-0000
43	HANDLE END CAP	CB-2034-0000
46	STEALTH JET RING NUT	CB-2040-0000

Item No.	Description	Part No.
47	VAPOUR ADAPTOR	CB-2047-0001
48	BLAST VALVE WASHER	CB-2048-0001
49	VAPOUR SPACER TUBE	CB-2069-0001
50	WHISPER HANDLE EXTENSION (LEFT HAND)	CB-2134-0001
51	WHISPER HANDLE EXTENSION (RIGHT HAND)	CB-2134-0002
52	STEALTH VENT TUBE	CB-2140-0000
55	STEALTH COIL	CB-2193-1000
56	SHADOW COIL (NO JETS - PLEASE SPECIFY RH OR LH)	CB-2209-2000
57	SHADOW CAN (RIGHT HAND)	CB-2209-2001
58	SHADOW CAN (LEFT HAND)	CB-2209-2002
59	DOUBLE BURNER HANDLE	CB-2210-0000
62	DOUBLE BURNER BRACKET	CB-2212-0000
63	M6 HEX HEAD BOLT GIMBAL	CB-2213-0000
64	TRIPLE BURNER BRACKET	CB-2216-0000
65	STEALTH CAN (RIGHT HAND/GIMBAL)	CB-2238-2001
66	STEALTH CAN (LEFT HAND/GIMBAL)	CB-2238-2002
67	TRIPLE BURNER HANDLE	CB-2249-0000
68	QUAD BURNER BRACKET	CB-2252-0000
69	QUAD BURNER HANDLE	CB-2253-0000
70	DOUBLE BURNER CROSSFLOW (COMPLETE)	CB-2290-0000
72	¼ BSP SEALING RING - OUTER	CB-2290-2001
73	¼ BSP SEALING RING - INNER	CB-2290-2002
78	VAPOUR FILTER SPRING	CU-4873-5000
80	LIQUID REGULATOR HEATER	CB-2434-0000
81	REGULATOR (COMPLETE ASSEMBLY - MOD C298)	CB-2429-0000
84	PRESSURE GAUGE TAKE-OFF FITTINGS	CB-2472-0000
86	BLAST VALVE SPRING	CU-7553-0009
87	PILOT LIGHT FLAME TUBE ASSY (RIGHT HAND)	CB-2530-1000
88	PILOT LIGHT FLAME TUBE ASSY (LEFT HAND)	CB-2530-2000
89	BLAST VALVE SERVICE KIT	CB-2601-0000
90	WHISPER VALVE SERVICE KIT	CB-2602-0000
91	LIQUID PILOT LIGHT JET KIT	CB-2603-0000

Not all parts illustrated are held in stock and may have to be ordered especially - Please contact aftersales@cameronballoons.co.uk for any further information or advice.

STEALTH / SHADOW / SINGLE / MINI

Item No.	Description	Part No.
92	LIQUID PILOT LIGHT REGULATOR SERVICE KIT	CB-2604-0000
93	LIQUID PILOT LIGHT VALVE STEM SERVICE KIT	CB-2605-0000
94	VAPOUR PILOT LIGHT SERVICE KIT	CB-2606-0000
95	BLAST VALVE MAIN SEAL KIT	CB-2607-0000
96	WHISPER/CROSSFLOW REPAIR KIT	CB-2612-0000
98	STEALTH/SHADOW PRESSURE GAUGE	CU-2948-5000
99	PRESSURE GAUGE GASKET	CU-2948-5001
100	MAIN VALVE LUBE SCREW	CU-4871-8000
101	PILOT VALVE SPRING	CU-4872-4000
105	M5 x 16 RAISED CSK HEAD (SLOTTED)	CY-0005-5016
106	M5 x 6 GRUB SCREW HEX SOCKET	CY-0005-6006
107	M6 AEROTIGHT NUT	CY-0006-1004
108	M6 x 10 CAP HEAD BOLT HEX SOCKET	CY-0006-3010
109	M6 X 16 CAP HEAD BOLT HEX SOCKET	CY-0006-3016
113	M6 x 6 GRUB SCREW HEX SOCKET	CY-0006-6006
119	PRESSURE GAUGE (SINGLE BURNER)	CB-2130-0001
120	SINGLE HANDLE END CAP (RED)	CB-2139-0001
121	SINGLE MANIFOLD GASKET	CB-2135-0018
122	SINGLE HANDLE END CAP (GREEN)	CB-2139-0002
123	BURNER TOOL KIT - SPANNER	CB-2438-1000
131	LUBE SCREW 'O' RINGS	CB-2609-0000
	** ALL ITEMS BELOW FOR SQUEEZE ACTION HANDLE ONLY (FOR NON-SQUEEZE ACTION DOUBLE BURNERS - ITEM 70)	
124	CROSSFLOW TUBE - STRAIGHT (TRIPLE/QUAD)	CB-2334-0000
125	CROSSFLOW TUBE - CURVED (TRIPLE/QUAD)	CB-2336-0000
126	CROSSFLOW VALVE	CB-8598-0000
127	BANJO BOLT	CB-2335-0000
128	COPPER WASHER	CB-2344-0004
129	TRIPLE CROSSFLOW ASSEMBLY - CURVED (COMPLETE)	CB-2347-0000
130	TRIPLE or QUAD CROSSFLOW ASSEMBLY - STRAIGHT - (COMPLETE) FOR QUAD, ONE OR TWO SETS CAN BE ORDERED	CB-2344-0000

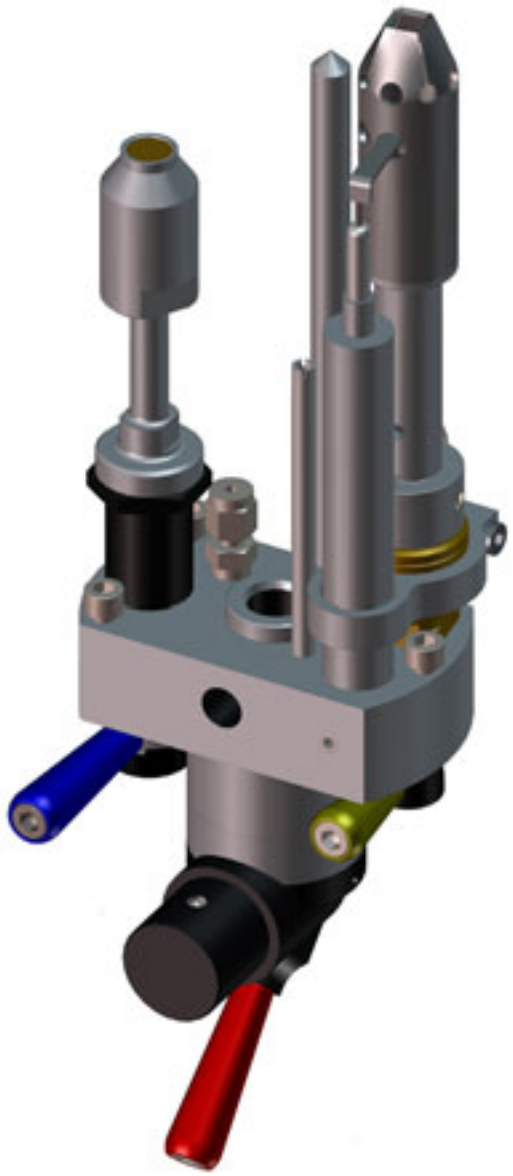

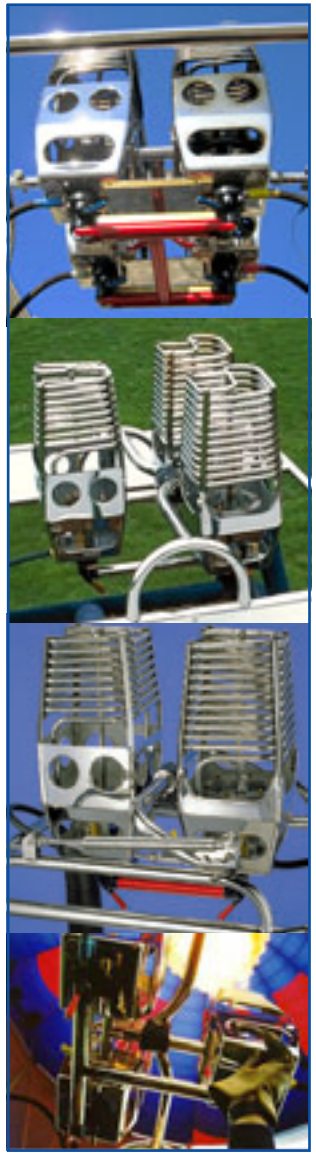

Double/Triple/Quad Valve & Manifold Fittings

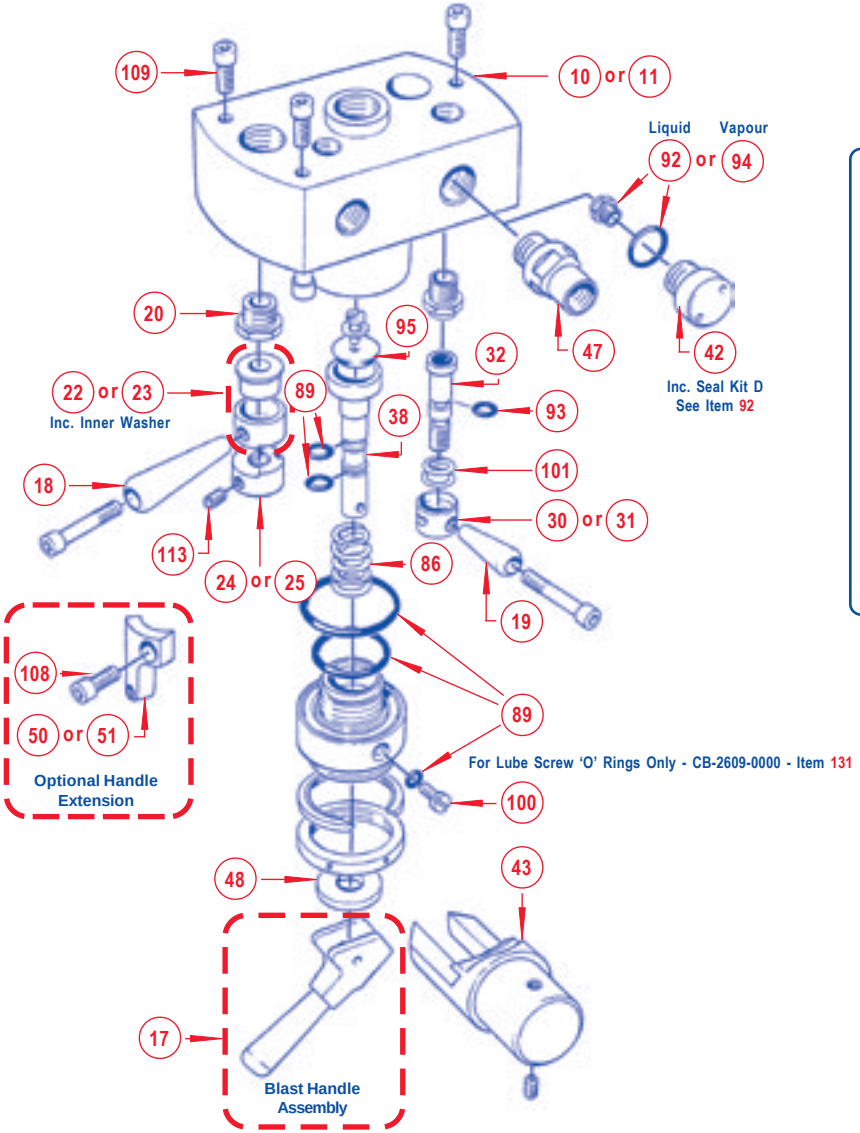

NOTES:

SEAL KIT ITEMS

89 = CB-2601-0000

90 = CB-2602-0000

91 = CB-2603-0000 (Liquid)

93 = CB-2605-0000

95 = CB-2607-0000

92 = Part of CB-2604-0000
or
94 = CB-2606-0000 (Vapour)

84 = CB-2472-0000 (Stainless Steel Kit)
DO NOT MIX WITH BRASS

123 = Burner Tool Kit - Red Spanner

131 = Lube Screw 'O' Rings - CB-2609-0000

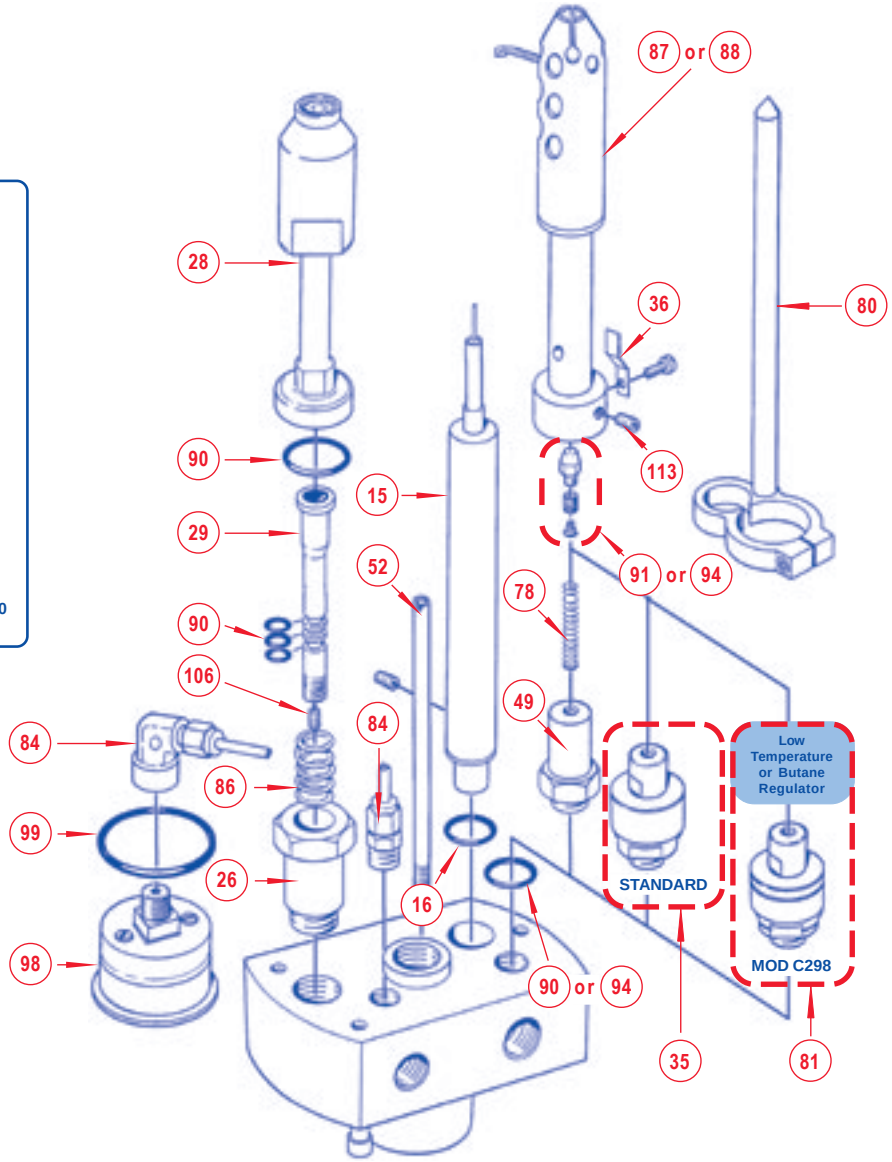

Not all parts illustrated are held in stock and may have to be ordered especially - Please contact aftersales@cameronballoons.co.uk for any further information or advice.

Double/Triple/Quad Valve & Manifold Fittings

10 or 11 CB-2006-1000 (RH) CB-2006-2000 (LH)	15 CB-2011-0001	16 CB-2011-0003	17 CQ-2022-0000 RED	18 CB-2015-2000 (BLUE)	19 CB-2015-3000 (GOLD)	20 CB-2015-4000	22 CB-2016-1000 (RH) (INC. INNER WASHER)
23 CB-2016-2000 (LH) (INC. INNER WASHER)	24 CB-2016-3000 (RH)	25 CB-2016-4000 (LH)	26 CB-2017-0000	28 CB-2018-2019	29 CB-2020-0000	30 CB-2021-0001 (RH)	31 CB-2021-0002 (LH)	32 CB-2022-0000
35 CB-2026-1000 (STANDARD) FOR MOD C298, SEE ITEM 81	36 CB-2026-0002	38 CB-2029-0000	42 CB-2033-0000 (INC. SEAL KIT D - ITEM NO. 92)	43 CB-2034-0000	47 CB-2047-0001	48 CB-2048-0001	49 CB-2069-0001	50 CB-2134-0001 (LH)
51 CB-2134-0002 (RH)	52 CB-2140-0000	78 CU-4873-5000	80 CB-2434-0000	81 CB-2429-0000 (MOD C298) FOR STANDARD, SEE ITEM 35	84 CB-2472-0000 DO NOT MIX WITH BRASS	86 CU-7553-0009	87 CB-2530-1000 (RH)	88 CB-2530-2000 (LH)
89 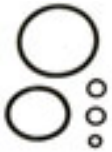 CB-2601-0000	90 CB-2602-0000	91 CB-2603-0000 (LIQUID)	92 CB-2604-0000	93 CB-2605-0000	94 CB-2606-0000 (VAPOUR)	95 CB-2607-0000	98 CU-2948-5000	99 CU-2948-5001
100 CU-4871-8000	101 CU-4872-4000	106 CY-0005-6006	108 CY-0006-3010	109 CY-0006-3016	113 CY-0006-6006	123 CB-2438-1000	131 CB-2609-0000	

Can, Mounting, Crossflow, Handles, Cans, Coils, Jets & Foils

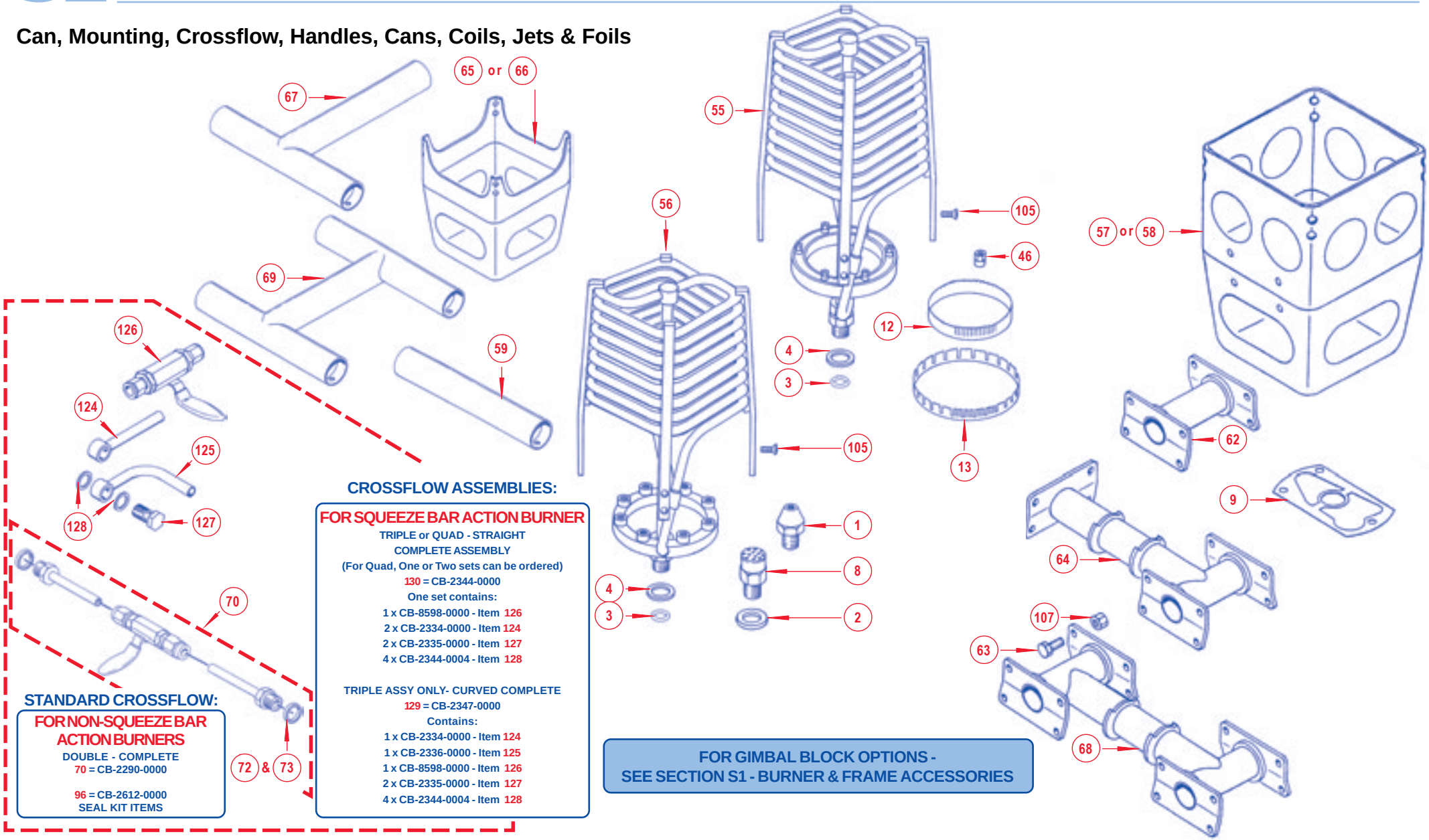

CROSSFLOW ASSEMBLIES:

FOR SQUEEZE BAR ACTION BURNER

TRIPLE or QUAD - STRAIGHT
COMPLETE ASSEMBLY
(For Quad, One or Two sets can be ordered)
130 = CB-2344-0000
One set contains:
1 x CB-8598-0000 - Item 126
2 x CB-2334-0000 - Item 124
2 x CB-2335-0000 - Item 127
4 x CB-2344-0004 - Item 128

TRIPLE ASSY ONLY- CURVED COMPLETE
129 = CB-2347-0000
Contains:
1 x CB-2334-0000 - Item 124
1 x CB-2336-0000 - Item 125
1 x CB-8598-0000 - Item 126
2 x CB-2335-0000 - Item 127
4 x CB-2344-0004 - Item 128

STANDARD CROSSFLOW:

FOR NON-SQUEEZE BAR ACTION BURNERS

DOUBLE - COMPLETE
70 = CB-2290-0000

96 = CB-2612-0000
SEAL KIT ITEMS

FOR GIMBAL BLOCK OPTIONS -
SEE SECTION S1 - BURNER & FRAME ACCESSORIES

Not all parts illustrated are held in stock and may have to be ordered especially - Please contact aftersales@cameronballoons.co.uk for any further information or advice.

Can, Mounting, Crossflow, Handles, Cans, Coils, Jets & Foils

1 CB-0214-0003	2 CB-0214-0006	3 CB-0392-0021	4 CB-0392-0022	8 CB-0923-0001	9 CB-2005-0020	12 CB-2009-0020 INNER	13 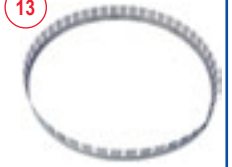 CB-2009-0021 OUTER	46 CB-2040-0000
55 CB-2193-1000	56 CB-2209-2000 (NO JETS) SPECIFY LH OR RH	57 CB-2209-2001 (RH)	58 CB-2209-2002 (LH)	59 CB-2210-0000	62 CB-2212-0000	63 CB-2213-0000	64 CB-2216-0000	
65 CB-2238-2001(RH/GIMBAL)	66 CB-2238-2002 (LH/GIMBAL)	67 CB-2249-0000	68 CB-2252-0000		69 CB-2253-0000	70 CB-2290-0000	72 CB-2290-2001 OUTER	73 CB-2290-2002 INNER
96 CB-2612-0000	105 CY-0005-5016	107 CY-0006-1004	124 CB-2334-0000 SQUEEZE ACTION ONLY	125 CB-2336-0000 TRIPLE BURNER - CURVED SQUEEZE ACTION ONLY	126 CB-8598-0000 SQUEEZE ACTION ONLY	127 CB-2335-0000 SQUEEZE ACTION ONLY	128 CB-2344-0004 SQUEEZE ACTION ONLY	129 CB-2347-0000 TRIPLE - CURVED SQUEEZE ACTION ONLY
130 CB-2344-0000 TRIPLE or QUAD (for Quad, One or Two sets can be ordered) SQUEEZE ACTION ONLY								

Not all parts illustrated are held in stock and may have to be ordered especially - Please contact aftersales@cameronballoons.co.uk for any further information or advice.

Manifold & Valve Fittings, Handle and Coil Assemby

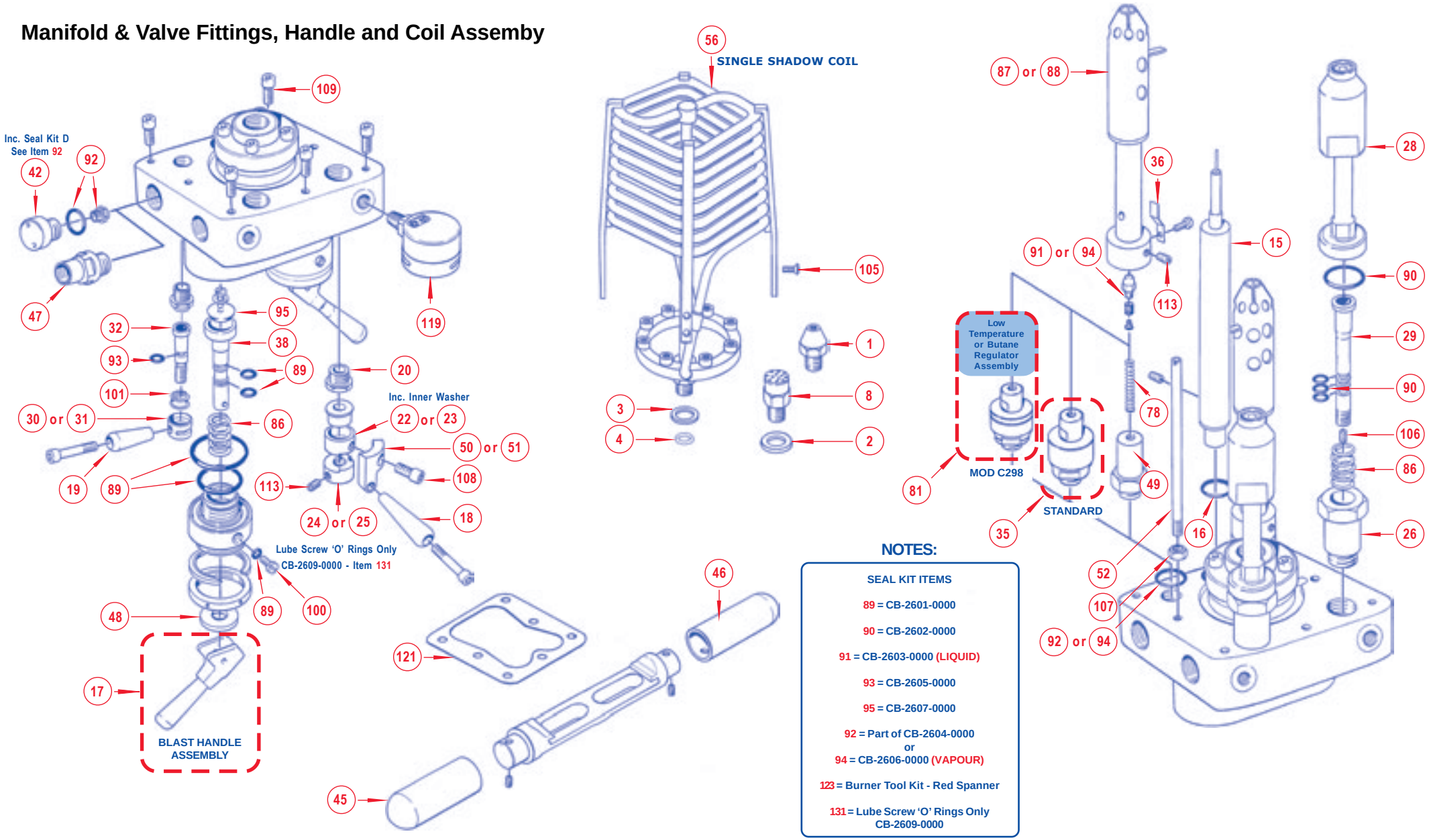

NOTES:

SEAL KIT ITEMS

89 = CB-2601-0000

90 = CB-2602-0000

91 = CB-2603-0000 (LIQUID)

93 = CB-2605-0000

95 = CB-2607-0000

92 = Part of CB-2604-0000
or
94 = CB-2606-0000 (VAPOUR)

123 = Burner Tool Kit - Red Spanner

131 = Lube Screw 'O' Rings Only
CB-2609-0000

Not all parts illustrated are held in stock and may have to be ordered especially - Please contact aftersales@cameronballoons.co.uk for any further information or advice.

Manifold & Valve Fittings, Handle and Coil Assembly

1 CB-0214-0003	2 CB-0214-0006	3 CB-0392-0021	4 CB-0392-0022	8 CB-0923-0001	15 CB-2011-0001	16 CB-2011-0003	17 CQ-2022-0000 (RED)	18 CB-2015-2000 (BLUE)
19 CB-2015-3000 (GOLD)	20 CB-2015-4000	22 CB-2016-1000 (RH) (INC. INNER WASHER)	23 CB-2016-2000 (LH) (INC. INNER WASHER)	24 CB-2016-3000 (RH)	25 CB-2016-4000 (LH) / 26 CB-2017-0000	28 CB-2018-2019	29 CB-2020-0000	30 CB-2021-1000 (RH)
31 CB-2021-2000 (LH)	32 CB-2022-0000	35 CB-2026-1000 (STANDARD) FOR MOD C298, SEE ITEM 81	36 CB-2026-0002	38 CB-2029-0000	42 CB-2033-0000 (INC. SEAL KIT D - ITEM 92)	47 CB-2047-0001	48 CB-2048-0001	49 CB-2069-0001 / 50 CB-2134-0001 (LH)
51 CB-2134-0002 (RH)	52 CB-2140-0000	56 CB-2209-2000 (NO JETS) SPECIFY LH OR RH	81 CB-2429-0000 (MOD C298) FOR STANDARD, SEE ITEM 35	86 CU-7553-0009	87 CB-2530-1000 (RH)	88 CB-2530-2000 (LH)	89 CB-2601-0000	90 CB-2602-0000 / 91 CB-2603-0000 (LIQUID)
92 CB-2604-0000 (LIQUID)	93 CB-2605-0000	94 CB-2606-0000 (VAPOUR)	95 CB-2607-0000	100 CU-4871-8000	101 CU-4872-4000	105 CY-0005-5016	106 CY-0005-6006	107 CY-0006-1004 / 108 CY-0006-3010
109 CY-0006-3016	113 CY-0006-6006	119 CB-2130-0001	120 CB-2139-0001 (RED)	121 CB-2135-0018	122 CB-2139-0002 (GREEN)	123 CB-2438-1000	131 CB-2609-0000	

Not all parts illustrated are held in stock and may have to be ordered especially - Please contact aftersales@cameronballoons.co.uk for any further information or advice.

Item No.	Description	Part No.
1	3/8 BSP COPPER GASKET	CA-0000-8198
3	BLAST VALVE BONNET	CB-8523-0000
4	BLAST VALVE WEAR PAD	CB-8524-0000
5	BLAST TRIGGER PIN	CB-8527-0000
6	HANDLE BOSS	CB-8528-0000
7	HANDLE END FITTING	CB-8529-0000
8	SLURPER TUBE	CB-8531-0000
9	MAIN BLAST JET	CB-8548-0000
10	BLAST TRIGGER ASSEMBLY	CB-8566-0000
15	COIL ASSEMBLY	CB-8600-1000
16	BLAST TRIGGER SPRING	CB-8602-0000
17	STRATUS MAIN VALVE SEAL KIT	CB-8612-1000
19	3/8 BSP BONDED SEAL	CH-3800-0003
21	BLAST VALVE SPRING	CU-7553-0009
22	M5 x 14 CAP HEAD BOLT	CY-0005-3014
23	M5 x 25 CAP HEAD BOLT	CY-0005-3025
24	M5 AEROTIGHT NUT	CY-0005-1004
25	M5 x 16 BUTTON HEAD BOLT	CY-0005-1016
26	M5 WASHER	CY-0005-2009
27	M8 WASHER	CY-0008-2008
28	LIQUID FIRE VALVE WEAR PAD	CA-0000-8227
29	TOGGLE / PIVOT PIN	CA-0000-8299
30	TOGGLE / PIVOT PIN CIRCLIP (5MM)	CA-0000-8300
31	TOGGLE VALVE STEM (MAIN VALVE) FOR USE WITH SINGLE STRATUS BURNER, PLEASE NOTE DIMENSIONAL CHANGE - CONTACT AFTERSALES@CAMERONBALLOONS.CO.UK FOR FURTHER INFORMATION	CB-8520-0000
32	LIQUID FIRE VALVE BONNET	CB-8521-0000
33	LIQUID FIRE TOGGLE	CB-8522-0000
34	LIQUID FIRE NOZZLE ASSEMBLY	CB-8553-0000
35	HIGH OUTPUT LIQUID FIRE NOZZLE ASSEMBLY	CB-8554-0000
39	¼ BSP COPPER GASKET	CA-0000-8201
46	PIEZO IGNITER	CB-8505-0000
47	IGNITER HOUSING	CB-8506-0000
48	IGNITER O-RING SEAL KIT	CB-8506-1000
49	STRATUS IGNITER SPRING (SUPERSEDED IGNITER LEAD)	CB-8664-0000
50	PILOT LIGHT FLAME CUP	CB-8509-0000
51	PILOT VALVE STEM	CB-8511-0000
52	PILOT VALVE NUT	CB-8512-0000
53	PILOT VALVE KNOB	CB-8513-0000
54	PILOT VALVE LEVER	CB-8514-0000

Item No.	Description	Part No.
55	PILOT VALVE DOWEL	CB-8515-0000
56	PILOT VALVE SPRING	CB-8516-0000
57	PILOT LIGHT STEM	CB-8517-0000
58	VAPORISER SPRING	CB-8539-0000
59	VAPORISER INLET FITTING	CB-8545-0000
60	SINTERED BRONZE FILTER	CB-8546-0000
61	LIQUID PILOT LIGHT JET	CB-8550-0000
62	VAPORISER OUTLET FITTING	CB-8556-0000
63	IGNITER CERAMIC - INSULATED SLEEVE	CB-8557-0000
64	IGNITER ELECTRODE	CB-8561-0000
65	PILOT LIGHT AIR REGULATOR	CB-8565-0000
68	VAPOUR PILOT VALVE SPRING	CB-8607-0000
69	PILOT VALVE SEAL KIT	CB-8614-1000
70	VAPORISER SEAL KIT	CB-8624-1000
71	M3 x 16 CAP HEAD BOLT	CY-0003-3016
72	GAUGE FEED COPPER WASHER	CB-8540-0000
73	GAUGE FEED PIPE - LH OR RH - (DOUBLE, TRIPLE OR QUAD)	CB-8551-0000
75	MALE COMPRESSION FITTING	CB-8588-0000
76	FEMALE COMPRESSION FITTING	CB-8589-0000
77	PRESSURE GAUGE	CB-8590-0000
78	CAN (DOUBLE, TRIPLE OR QUAD)	CB-8503-0000
79	DOUBLE HANGER	CB-8504-0000
80	DOUBLE HANDLE	CB-8530-0000
81	BLOCK O-RING (DOUBLE, TRIPLE OR QUAD)	CB-8533-0000
94	TRIPLE HANGER	CB-8592-0000
95	TRIPLE HANDLE	CB-8593-0000
96	QUAD HANGER	CB-8596-0000
99	M3 x 12 CSK HEAD BOLT	CY-0003-5012
100	CROSSFLOW PORT PLUG	CB-8532-0000
101	TRIPLE CROSSFLOW TUBE (STRAIGHT)	CB-8594-0000
102	TRIPLE CROSSFLOW TUBE (CURVED)	CB-8595-0000
103	QUAD CROSSFLOW TUBE	CB-8646-0000
104	STRATUS CROSSFLOW VALVE	CB-8598-0000
105	BANJO BOLT	CB-8599-0000
113	SOCKET TOOL (PILOT LIGHT)	CB-8650-1004
114	IGNITER TOOL	CB-8650-1002
115	TRIPLE CROSSFLOW ASSEMBLY (COMPLETE)	CB-8665-0000
116	QUAD CROSSFLOW ASSEMBLY (COMPLETE)	CB-8597-0000
117	STRATUS MANIFOLD BLOCK (LEFT HAND)	CB-8501-0000
118	STRATUS MANIFOLD BLOCK (RIGHT HAND)	CB-8502-0000

Not all parts illustrated are held in stock and may have to be ordered especially - Please contact aftersales@cameronballoons.co.uk for any further information or advice.

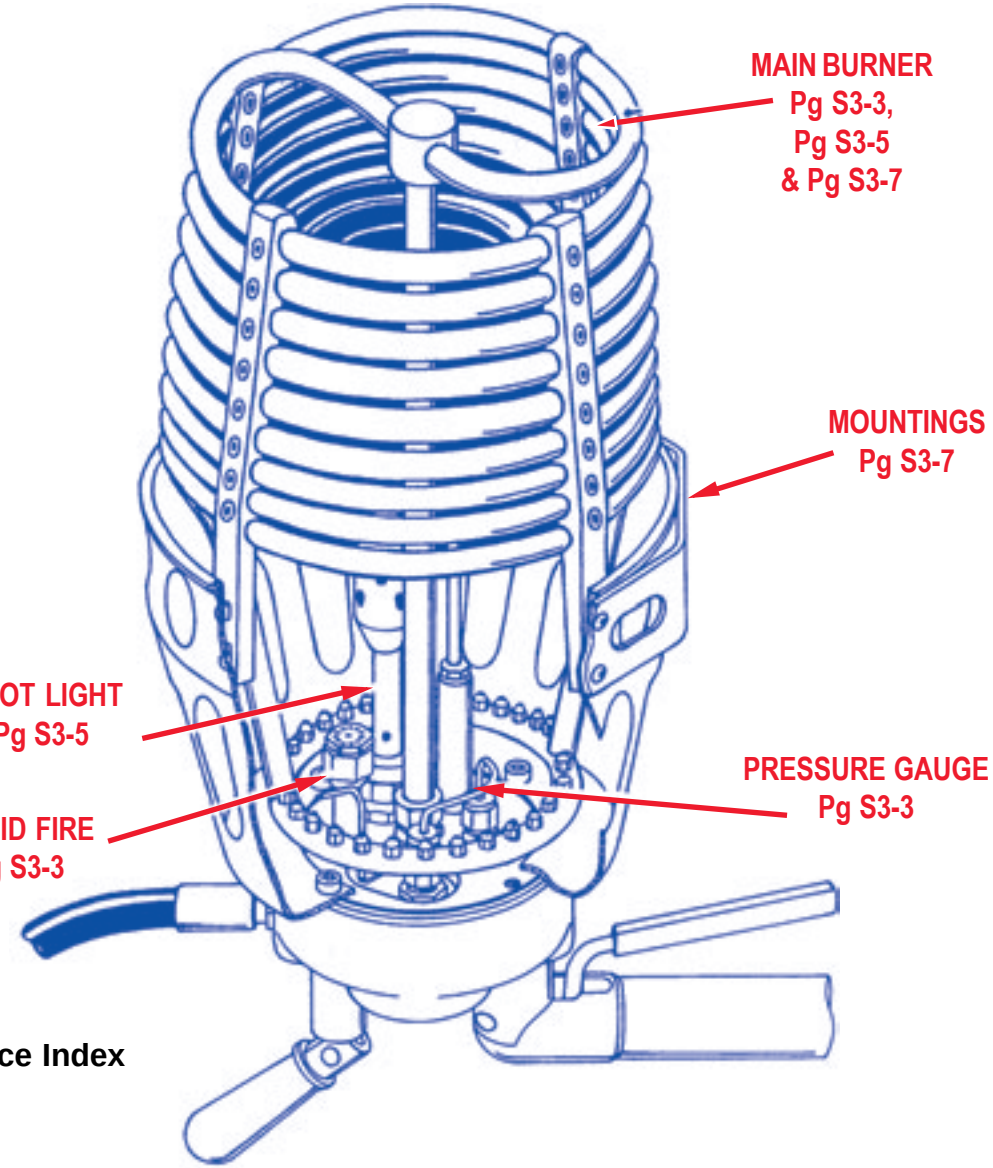

Quick Reference Index

Main Valve, Crossflow, Liquid Fire & Pressure Gauge Assembly

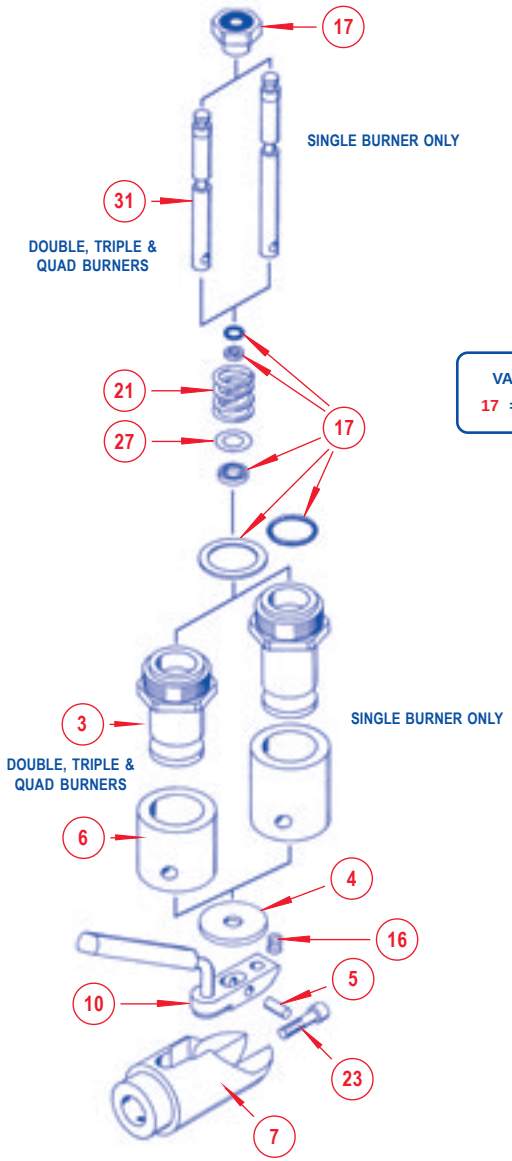

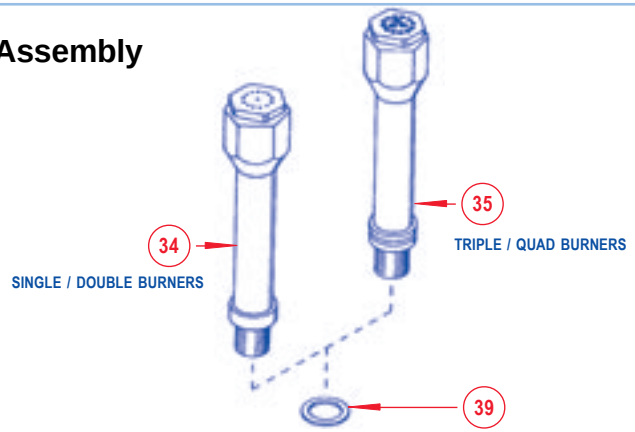

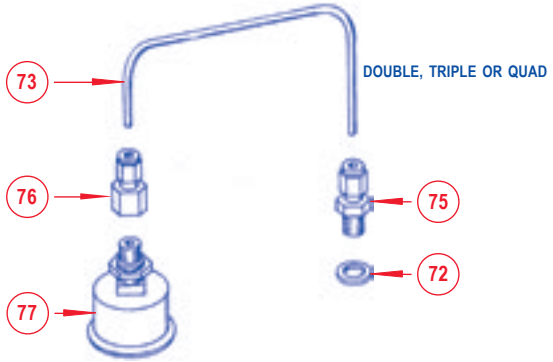

NOTES:

VALVE SEAL KIT
17 = CB-8612-1000

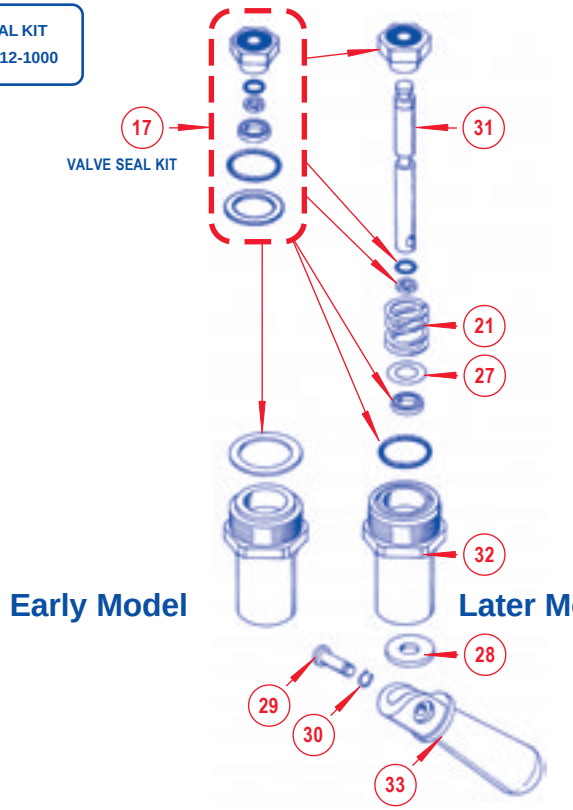

Early Model **Later Model**

CROSSFLOW ASSEMBLIES:

TRIPLE ASSEMBLY - COMPLETE
115 = CB-8665-0000
contains:
1 x CB-8594-0000 - Item 101
1 x CB-8595-0000 - Item 102
1 X CB-8598-0000 - Item 104
2 X CB-8599-0000 - Item 100
4 X CH-3800-0003 - Item 19

QUAD ASSEMBLY - COMPLETE
116 = CB-8665-0000
Contains:
1 X CB-8598-0000 - Item 104
2 x CB-8646-0000 - Item 103
2 X CB-8599-0000 - Item 100
4 X CH-3800-0003 - Item 19

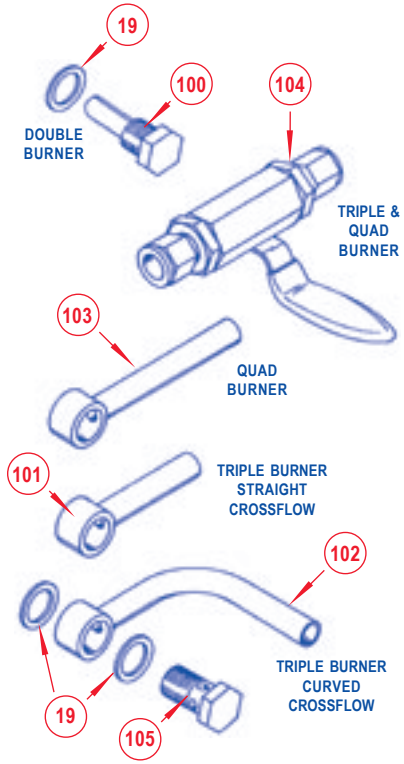

Not all parts illustrated are held in stock and may have to be ordered especially - Please contact aftersales@cameronballoons.co.uk for any further information or advice.

Main Valve, Crossflow, Liquid Fire & Pressure Gauge Assembly

3 CB-8523-0000	4 CB-8524-0000	5 CB-8527-0000	6 CB-8528-0000	7 CB-8529-0000	10 CB-8566-0000	16 CB-8602-0000	17 CB-8612-1000	19 CH-3800-0003
21 CU-7553-0009	23 CY-0005-3025	27 CY-0008-2008	28 CA-0000-8227	29 CA-0000-8299	30 CA-0000-8300	31 CB-8520-0000 FOR USE WITH SINGLE STRATUS, CONTACT FOR ADVICE	32 CB-8521-0000	33 CB-8522-0000
34 CB-8553-0000 SINGLE/DOUBLE BURNER	35 CB-8554-0000 TRIPLE/QUAD BURNER	39 CA-0000-8201	72 CB-8540-0000	73 CB-8551-0000 RH or LH	75 CB-8588-0000	76 CB-8589-0000	77 CB-8590-0000	100 CB-8532-0000
101 CB-8594-0000 TRIPLE BURNER - STRAIGHT	102 CB-8595-0000 TRIPLE BURNER - CURVED	103 CB-8646-0000 QUAD BURNER - STRAIGHT	104 CB-8598-0000	105 CB-8599-0000	115 CB-8665-0000 TRIPLE - CURVED	116 CB-8597-0000 TRIPLE or QUAD (for Quad, One or Two sets can be ordered)	

Pilot Light Valve, Piezo Igniter & Pilot Light Flame Tube Assembly

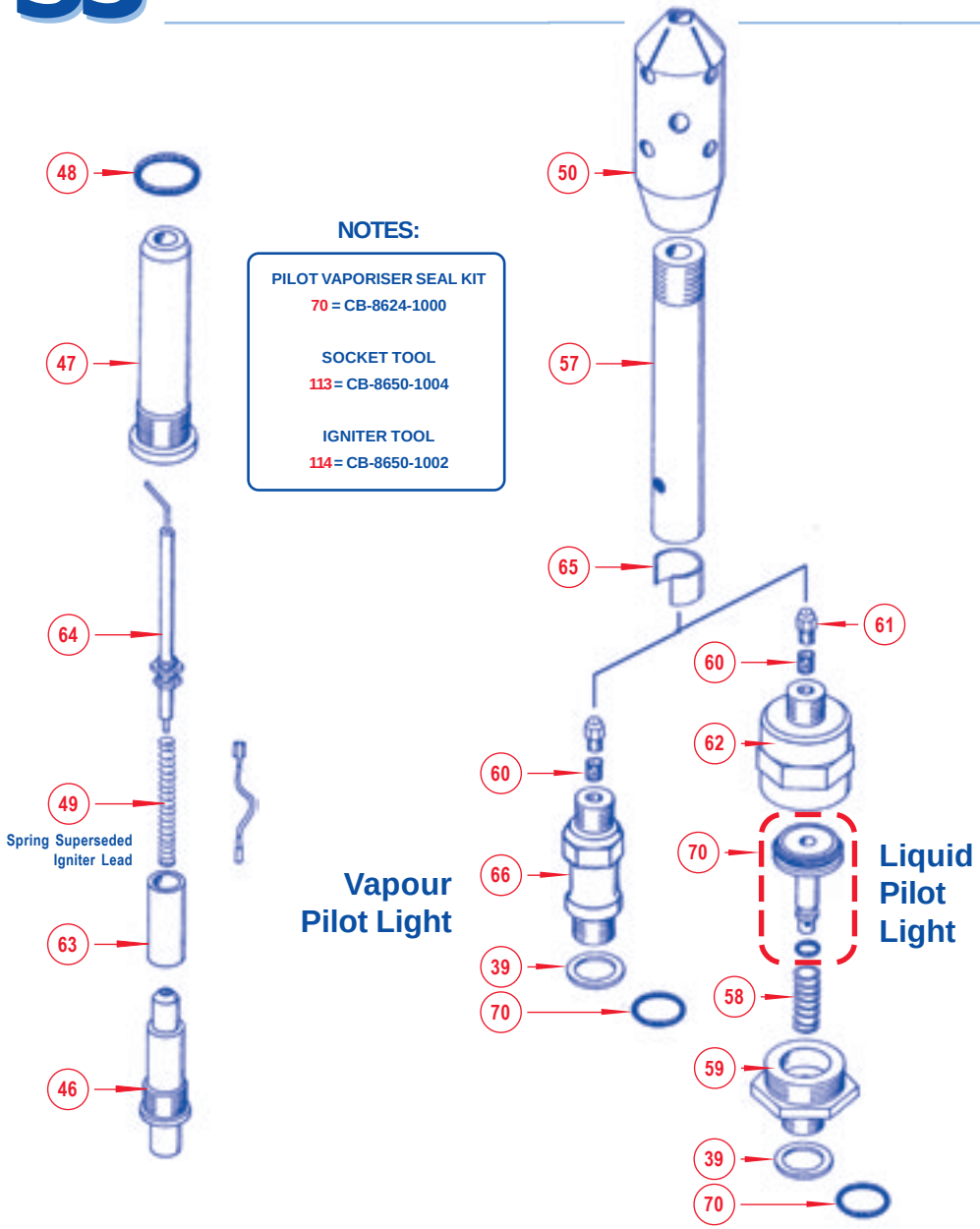

NOTES:

PILOT VAPORISER SEAL KIT
70 = CB-8624-1000

SOCKET TOOL
113 = CB-8650-1004

IGNITER TOOL
114 = CB-8650-1002

Liquid Pilot Light

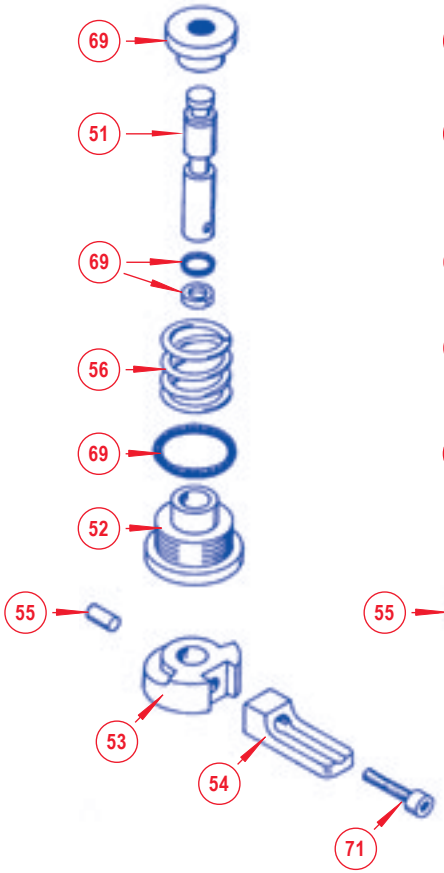

Vapour Pilot Light

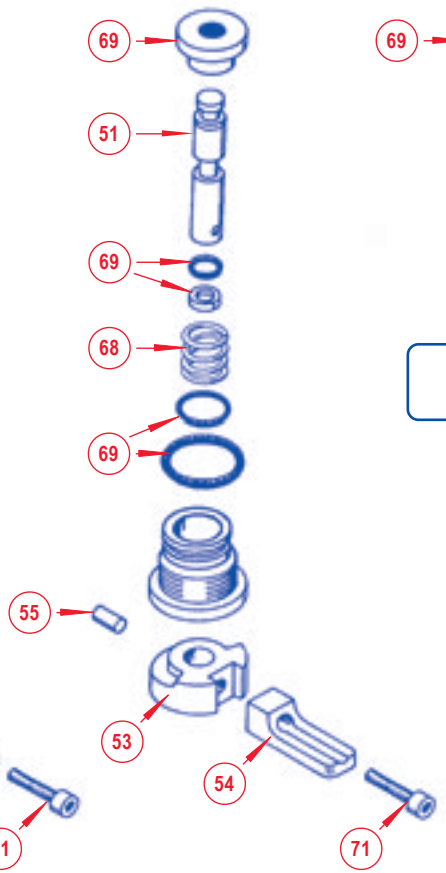

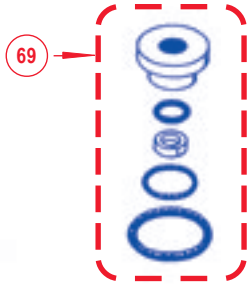

NOTES:

PILOT VALVE SEAL KIT
69 = CB-8614-1000

Not all parts illustrated are held in stock and may have to be ordered especially - Please contact aftersales@cameronballoons.co.uk for any further information or advice.

Pilot Light Valve, Piezo Igniter & Pilot Light Flame Tube Assembly

39 CA-0000-8201	46 CB-8505-0000	47 CB-8506-0000	48 CB-8506-1000	49 CB-8664-0000 SUPERSEDED IGNITER LEAD	50 CB-8509-0000	51 CB-8511-0000	52 CB-8512-0000	53 CB-8513-0000
54 CB-8514-0000	55 CB-8515-0000	56 CB-8516-0000	57 CB-8517-0000	58 CB-8539-0000	59 CB-8545-0000	60 CB-8546-0000	61 CB-8550-0000	62 CB-8556-0000
63 CB-8557-0000	64 CB-8561-0000	65 CB-8565-0000	68 CB-8607-0000	69 CB-8614-1000	70 CB-8624-1000	71 CY-0003-3016	113 CB-8650-1004	114 CB-8650-1002

Piezo Igniter, Mounting Brackets, Handles, Coil and Can Assembly

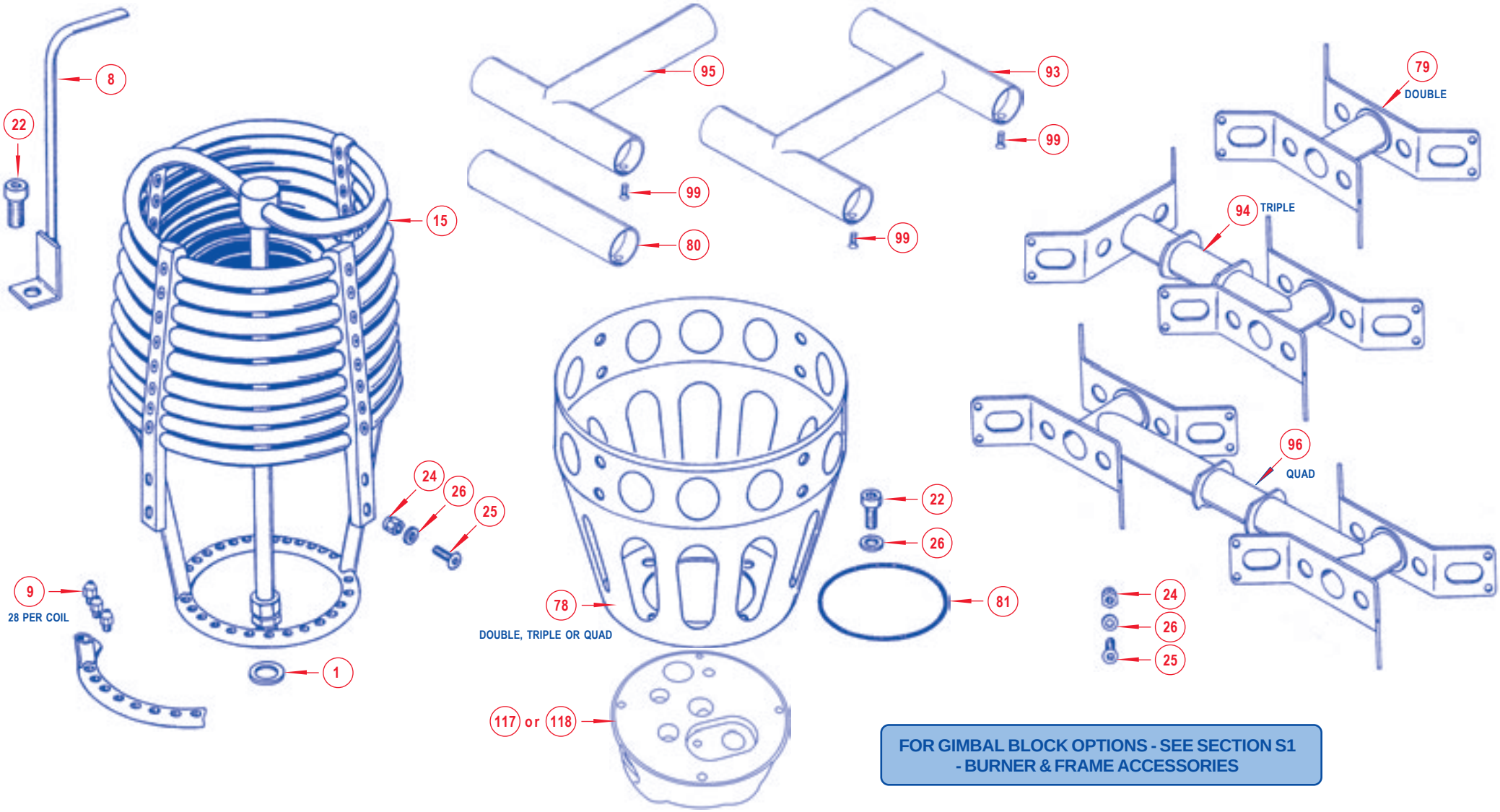

FOR GIMBAL BLOCK OPTIONS - SEE SECTION S1 - BURNER & FRAME ACCESSORIES

Not all parts illustrated are held in stock and may have to be ordered especially - Please contact aftersales@cameronballoons.co.uk for any further information or advice.

Piezo Igniter, Mounting Brackets, Handles, Coil and Can Assembly

1

CA-0000-8198

8

CB-8531-0000

9

CB-8548-0000

15

CB-8600-1000

22

CY-0005-3014

24

CY-0005-1004

25

CY-0005-1016

26

CY-0005-2009

78

CB-8503-0000

79

CB-8504-0000

80

CB-8530-0000

81
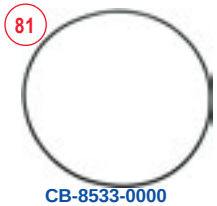
CB-8533-0000

94

CB-8592-0000

95

CB-8593-0000

96

CB-8596-0000

99

CY-0003-5012

93

CB-8504-0000

117

CB-8501-0000 (LH)

118

CB-8502-0000 (RH)

SIROCCO/SIROCCO EP

Item No.	Description	Part No.
3	PRESSURE GAUGE FITTING (SS-200-1-2)	CB-2472-0002
4	MAIN VALVE SPRING	CU-7553-0009
5	LIQUID PILOT LIGHT JET KIT	CB-2603-0000
6	BLAST VALVE STEM 'O' RING KIT	CB-2676-0000
7	SIROCCO EP 'O' RING KIT	CB-2678-1000
8	SIROCCO EP SOLENOID REPAIR	CB-2678-2000
9	BLAST VALVE REPAIR KIT	CB-2680-0000
10	SIROCCO PILOT/WHISPER VALVE REPAIR KIT	CB-2681-0000
11	COIL END FITTING REPAIR KIT	CB-2682-0000
12	PILOT LIGHT INLET FILTER REPAIR KIT	CB-2683-0000
13	LIQUID PILOT LIGHT REGULATOR REPAIR KIT	CB-2684-0000
14	COIL TO JET RING FITTING REPAIR KIT	CB-2685-0000
15	REPLACEMENT BI-METAL STRIP KIT	CB-2687-0000
16	PRESSURE GAUGE SEAL KIT	CB-2688-0000
17	SIROCCO COIL ASSEMBLY (LH)	CB-2719-1000
18	SIROCCO COIL ASSEMBLY (RH)	CB-2719-2000
22	SIROCCO GIMBAL MOUNTING BRACKET (DOUBLE)	CB-2723-0000
26	SIROCCO BLAST VALVE STEM ASSEMBLY (OLD TYPE)	CB-2730-0000
27	SIROCCO BLAST VALVE STEM ASSEMBLY	CB-2806-0000
28	BRASS RETAINING NUT, JET RING SIROCCO	CB-2732-0000
30	BLAST VALVE HANDLE (RED)	CB-2734-0000
37	WHISPER/PILOT VALVE SHUTTER ASSEMBLY	CB-2743-0000
46	PILOT LIGHT REGULATOR PISTON ASSEMBLY	CB-2754-0000
48	SIROCCO HEATER SUPPORT RING	CB-2756-0000
49	PILOT LIGHT REGULATOR HEATER ROD	CB-2757-0000
50	PILOT LIGHT FLAME TUBE LOWER ASSEMBLY	CB-2758-0000
53	PILOT LIGHT FLAME TUBE GAUZE	CB-2761-0000
56	PIEZO IGNITER CERAMIC ELECTRODE	CB-2764-0000
57	PIEZO IGNITER INSULATOR	CB-2765-0000
58	PIEZO IGNITER UNIT	CB-2766-0000

Item No.	Description	Part No.
59	PIEZO IGNITER SPRING	CB-2767-0000
60	JET RING - OUTER ASSY (INC THREADED BARS & ITEMS 4 & 122)	CB-2679-0000
61	JET RING - INNER	CB-2774-0000
62	JET RING FOIL OUTER	CB-2775-0000
63	JET RING FOIL INNER	CB-2776-0000
64	JET RING - BI-METALLIC STRIP (SEE ITEM 15)	CB-2777-0000
65	JET RING ASSEMBLY - COMPLETE	CB-2720-0000
75	WHISPER/PILOT VALVE STEM ASSY	CB-2744-0000
76	BLAST VALVE BONNET	CB-2788-0000
78	SIROCCO HANDLE CROSSBAR (DOUBLE) PLEASE SPECIFY IF EXISTING HANDLE HAS GOLD SQUEEZE ACTION	CB-2807-1000
79	SIROCCO HANDLE CROSSBAR (TRIPLE/QUAD) PLEASE SPECIFY IF EXISTING HANDLE HAS GOLD SQUEEZE ACTION	CB-2807-2000
109	SINTERED BRONZE FILTER	CB-8546-0000
111	PRESSURE GAUGE FITTING (SS-200-7-2)	CB-8589-0000
112	SIROCCO PRESSURE GAUGE	CB-8590-0000
113	COMPRESSION SPRING	CB-8602-0000
116	SIROCCO EP VENT JET	CB-9526-0000
117	M4 PLAIN WASHER	CY-0004-2008
118	M4 x 6 PAN HEAD BOLT	CY-0004-4006
119	M4 x 10 PAN HEAD BOLT	CY-0004-4010
121	M5 AEROTIGHT NUT	CY-0005-1004
124	M5 PLAIN WASHER	CY-0005-2008
125	M5 x 16 HEX SOCKET CAP HEAD SCREW	CY-0005-3016
132	M6 x 25 CAP HEAD BOLT HEX SOCKET	CY-0006-3025
133	M6 x 6 GRUB SCREW HEX SOCKET	CY-0006-6006
134	M8 PLAIN WASHER	CY-0008-2008
135	BANANNO SPANNER	CB-2748-0000
136	LUBE SCREW 'O' RINGS	CB-2609-0000
137	M3 x 45 PAN HEAD BOLT	CY-1003-4045

Not all parts illustrated are held in stock and may have to be ordered especially - Please contact aftersales@cameronballoons.co.uk for any further information or advice.

Main Blast, Pilot Light and Whisper Valves

IMPORTANT:
VALVE BLOCK SERIAL NO. 0048 & BELOW, SOME PARTS ARE DIFFERENT.
FOR FURTHER INFORMATION, PLEASE CONTACT:
AFTERSALES@CAMERONBALLOONS.CO.UK

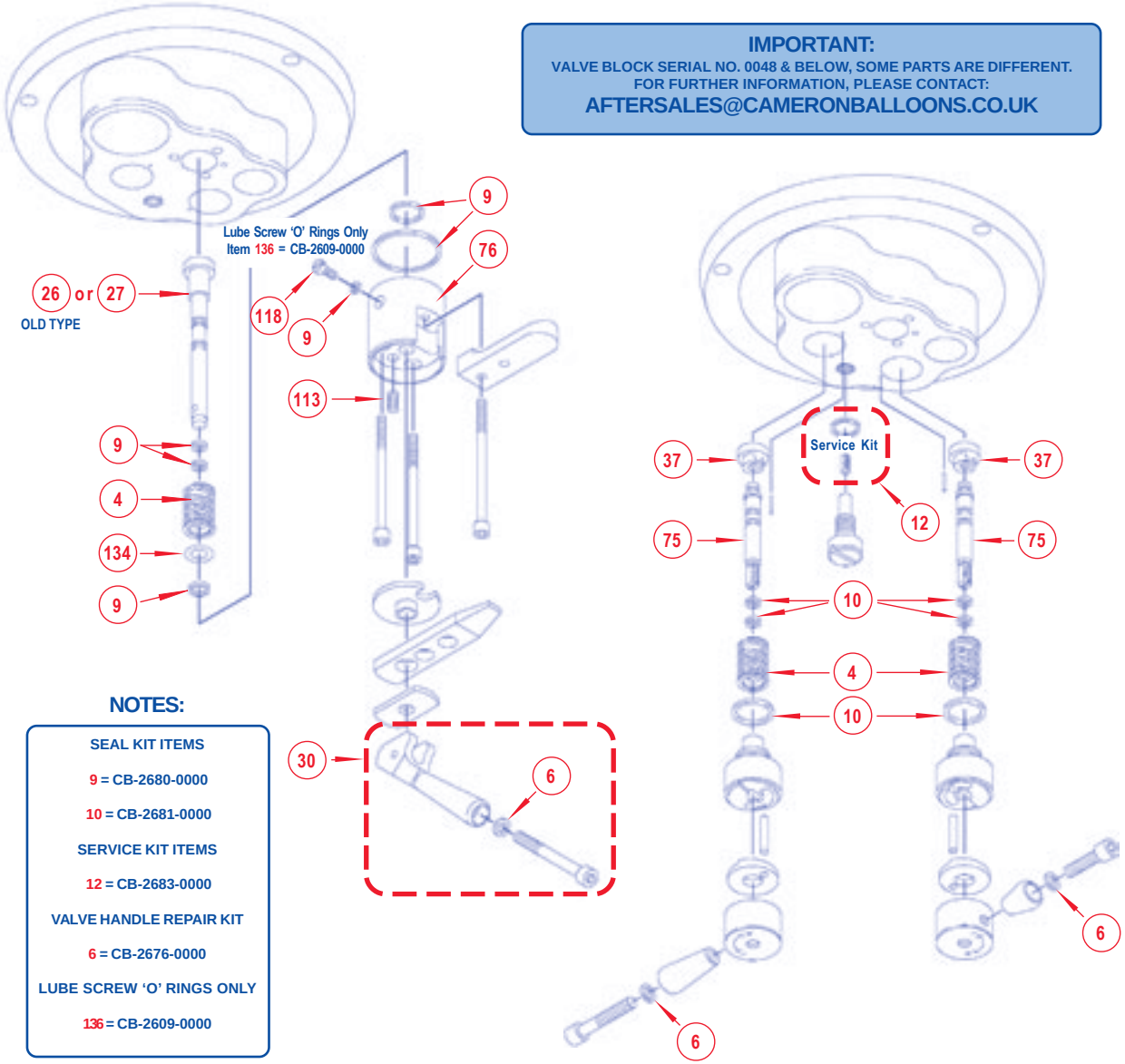

NOTES:

SEAL KIT ITEMS

9 = CB-2680-0000

10 = CB-2681-0000

SERVICE KIT ITEMS

12 = CB-2683-0000

VALVE HANDLE REPAIR KIT

6 = CB-2676-0000

LUBE SCREW 'O' RINGS ONLY

136 = CB-2609-0000

4 CU-7553-0009	6 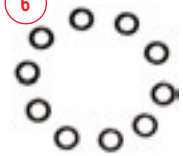 CB-2676-0000	9 CB-2680-0000	10 CB-2681-0000
12 CB-2683-0000	26 CB-2730-0000 (OLD TYPE)	27 CB-2806-0000	30 CB-2733-2734
37 CB-2743-0000	75 CB-2744-0000	76 CB-2788-0000	113 CB-8602-0000
118 CY-0004-4006	134 CY-0008-2008	136 CB-2609-0000	

Pilot Light, Whisper Jet Sleeve, Piezo Igniter and Pressure Gauge

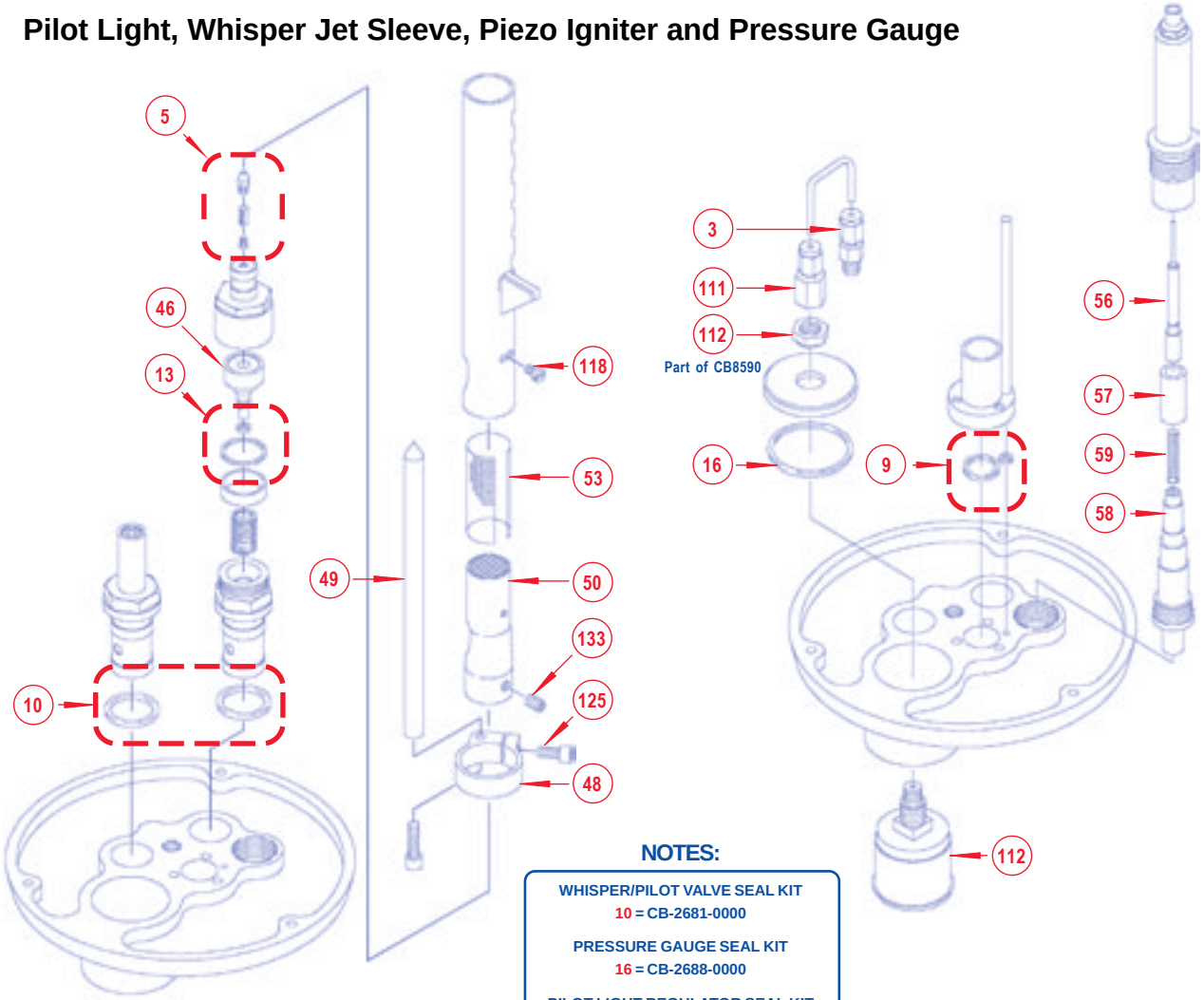

NOTES:

WHISPER/PILOT VALVE SEAL KIT
10 = CB-2681-0000

PRESSURE GAUGE SEAL KIT
16 = CB-2688-0000

PILOT LIGHT REGULATOR SEAL KIT
13 = CB-2684-0000

PILOT LIGHT JET / FILTER SERVICE KIT
5 = CB-2603-0000

BLAST VALVE SEAL KIT
9 = CB-2680-0000

3 CB-2472-0002	5 CB-2603-0000	9 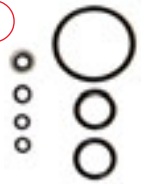 CB-2680-0000	10 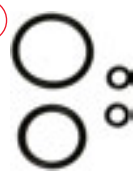 CB-2681-0000
13 CB-2684-0000	16 CB2688-0000	46 CB-2754-0000	48 CB-2756-0000
49 CB-2757-0000	50 CB-2758-0000	53 CB-2761-0000	56 CB-2764-0000
57 CB-2765-0000	58 CB-2766-0000	59 CB-2767-0000	111 CB-8589-0000
133 CY-0006-6006	112 CB-8590-0000	118 CY-0004-4006	125 CY-0005-3016

Not all parts illustrated are held in stock and may have to be ordered especially - Please contact aftersales@cameronballoons.co.uk for any further information or advice.

Coil, Can & Jet Assemby

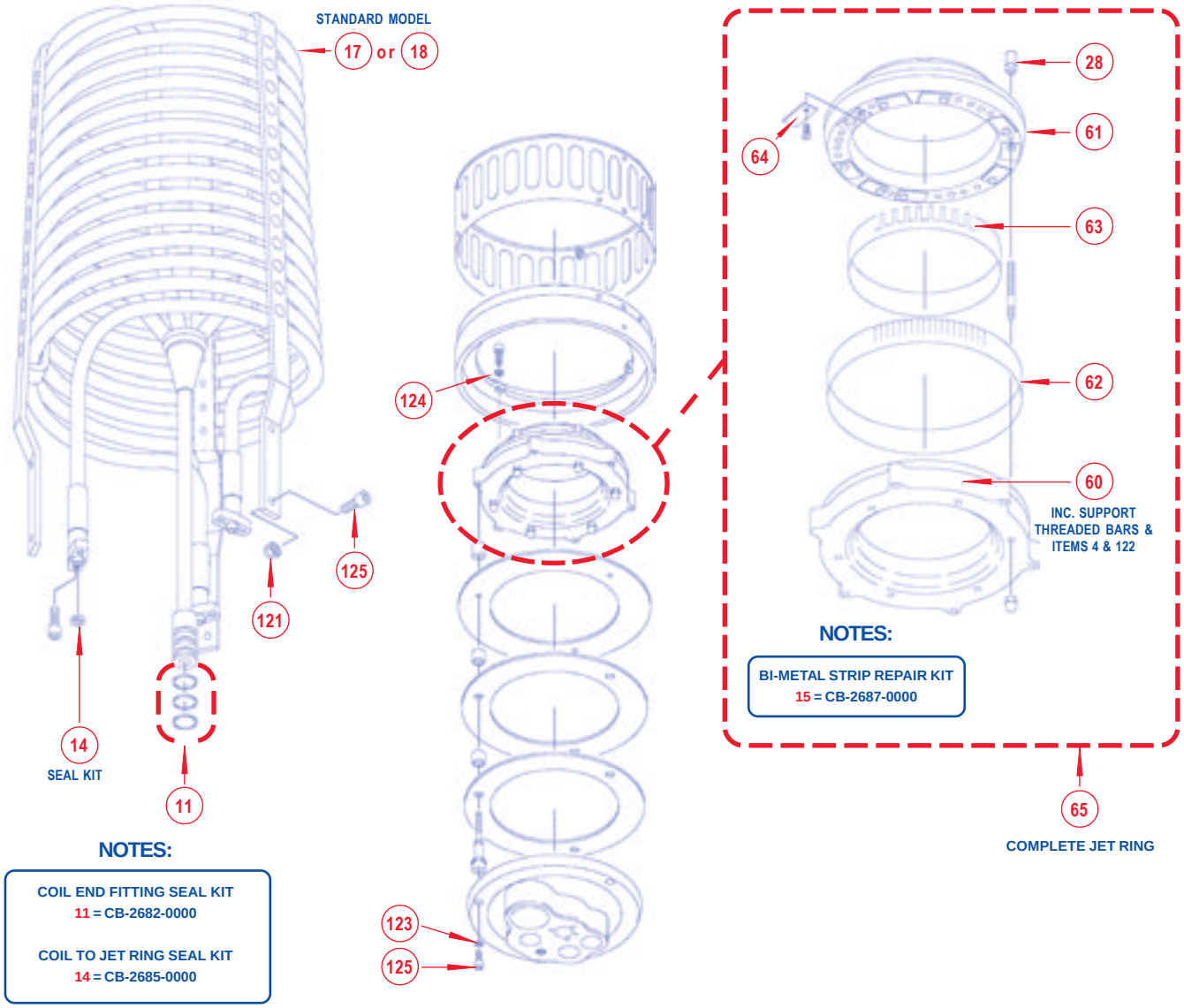

NOTES:

COIL END FITTING SEAL KIT
11 = CB-2682-0000

COIL TO JET RING SEAL KIT
14 = CB-2685-0000

NOTES:

BI-METAL STRIP REPAIR KIT
15 = CB-2687-0000

11 CB-2682-0000	14 CB-2685-0000	15 CB-2687-0000
17 CB-2719-1000 (LH)	18 CB-2719-2000 (RH)	28 CB-2732-0000
64 CB-2777-0000 SEE ITEM 15	60 CB-2679-0000 INC. SUPPORT THREADED BARS & ITEMS 4 & 122	65 CB-2720-0000 COMPLETE JET RING
121 CY-0005-1004	123 CY-0005-2007	124 CY-0005-2008
125 CY-0005-3016		

Handle and Mounting Assemby

FOR GIMBAL BLOCK OPTIONS - SEE SECTION S1 - BURNER & FRAME ACCESSORIES

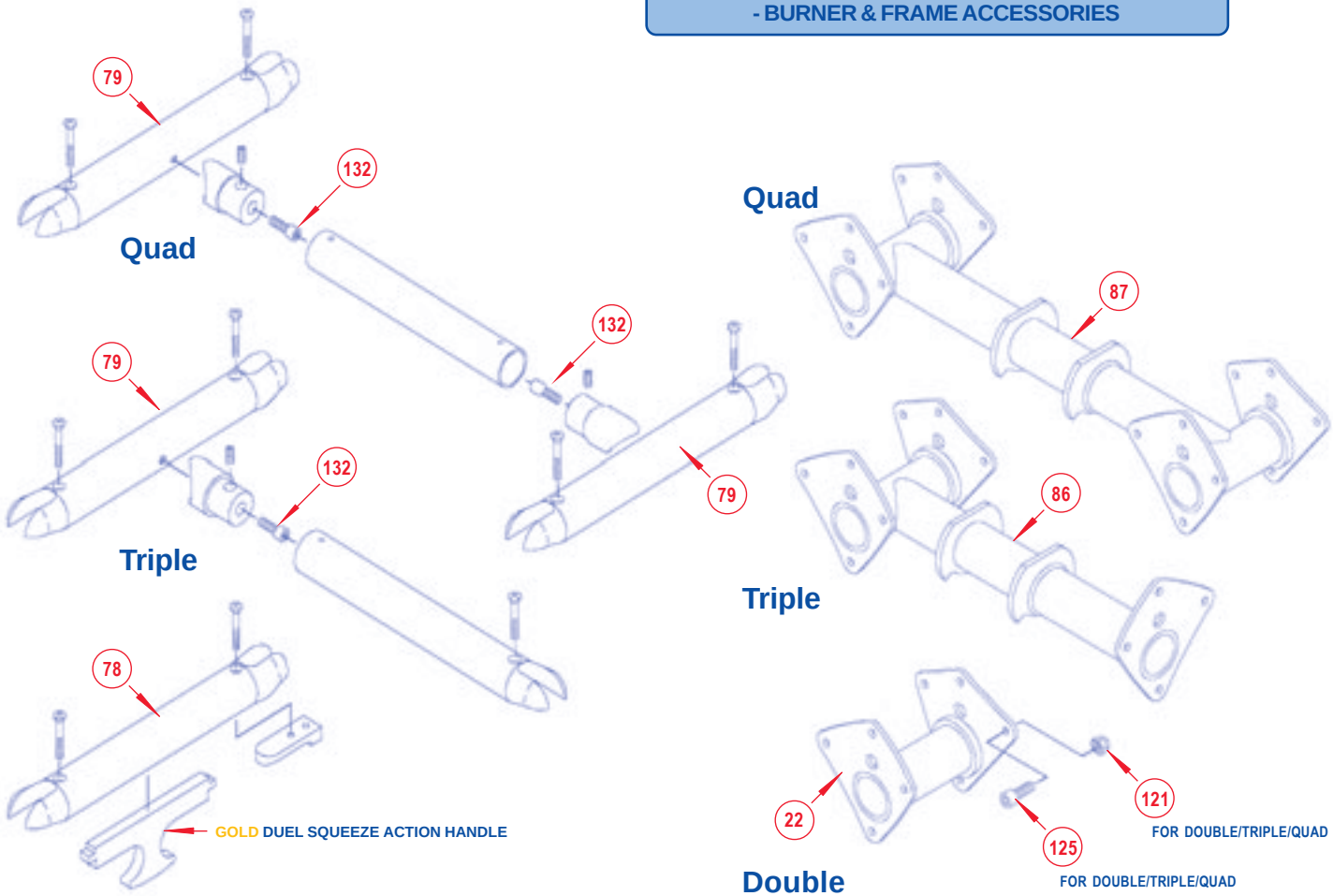

22

CB-2723-0000

78

CB-2807-1000 DOUBLE ONLY
HANDLE FOR GOLD DUEL SQUEEZE ACTION

79

CB-2807-2000 TRIPLE / QUAD
HANDLE FOR GOLD DUEL SQUEEZE ACTION

121

CY-0005-1004

125

CY-0005-3016

132

CY-0006-3025

135

CB-2748-0000

Not all parts illustrated are held in stock and may have to be ordered especially - Please contact aftersales@cameronballoons.co.uk for any further information or advice.

EP Blast Valve Sleeve Assembly

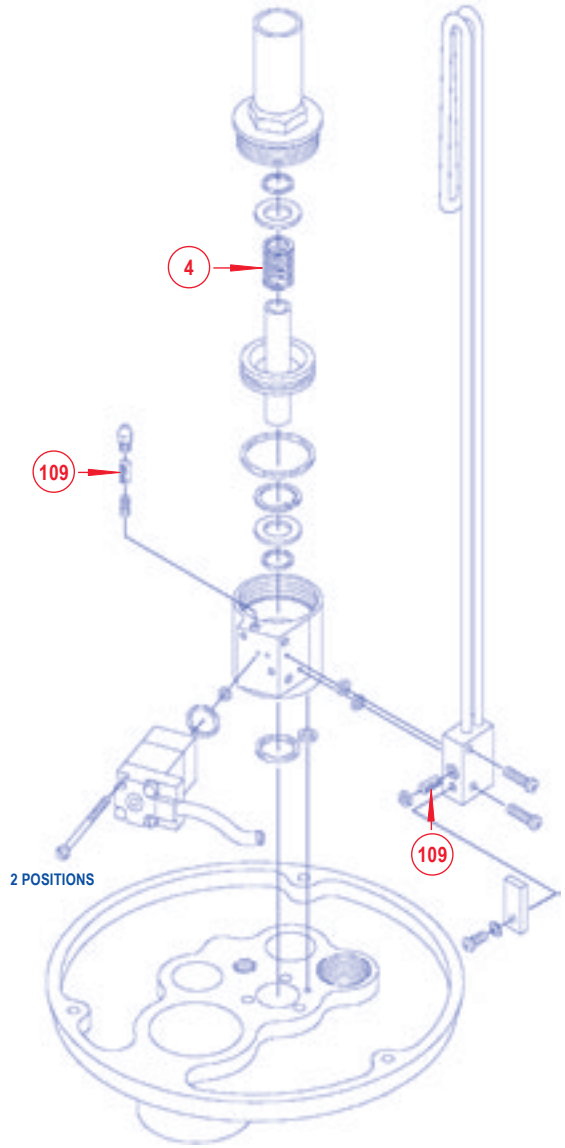

Item No.	Description	Part No.
1	AMAL MAIN JET	CB-0214-0003
2	COPPER WASHER	CB-0214-0006
3	3/8 BSP SEALING RING - OUTER	CB-0392-0021
4	3/8 BSP SEALING RING - INNER	CB-0392-0022
5	SADDLE - Ø19mm TUBE (PLEASE SPECIFY - 4.76, 6.35, 11.11 OR 15.9mm) Ø25mm TUBE (PLEASE SPECIFY - 4.76, 6.35 OR 11.11mm)	CB-0543-0004
6	WHISPER VALVE (RIGHT HAND)	CB-0558-0001
7	WHISPER VALVE (LEFT HAND)	CB-0558-0002
8	3/8 OD CROSSFLOW ASSEMBLY (THIS PART IS MADE TO ORDER)	CB-578
9	Mk4 SUPER COIL (NO JETS - PLEASE SPECIFY LH OR RH)	CB-0584-2000
10	ADAPTOR FOR MULTI HOLE STANDARD WHISPER JET	CB-0588-0003
12	M8 SPECIAL SCREW FOR BURNER CAN	CB-0737-0000
13	MULTI HOLE STANDARD WHISPER JET	CB-0924-0001
14	MULTI HOLE MAIN JET	CB-0923-0001
15	STEALTH VENT TUBE (THIS PART IS MADE TO ORDER)	CB-2140
16	PILOT LIGHT SLEEVE (THIS PART IS MADE TO ORDER)	CB-2493
17	SERVICE KIT	CB-2605-0000
18	SERVICE KIT	CB-2606-0000
19	SERVICE KIT	CB-2607-0000
20	SERVICE KIT	CB-2611-0000
22	Mk4 SUPER PRESSURE GAUGE	CB-2887-0000
23	PRESSURE GAUGE LENS KIT	CU-2948-0002
24	LEAK DUCT TUBE	CU-4870-6000

Item No.	Description	Part No.
25	MAIN VALVE PIVOT PIN	CU-4870-8000
26	HANDLE GRUB SCREW	CU-4870-9000
27	MAIN VALVE WASHER	CU-4871-0000
28	MAIN VALVE STEM	CU-4871-1000
29	MAIN VALVE SHUTTER	CU-4871-3000
30	MAIN VALVE LUBE SCREW	CU-4871-8000
31	PILOT VALVE STEM (2 VARIANTS AVAILABLE) PLEASE SPECIFY IF EXISTING HANDLE HAS A WELDED NUT OR A FREE NUT	CU-4872-2000
32	PILOT VALVE SPRING	CU-4872-4000
33	PILOT VALVE HANDLE (LEFT HAND) SUPERSEDES WELDED NUT CONNECTION ON HANDLE - MAY ALSO REQUIRE ITEM 31 - CONTACT FOR ADVICE	CU-4872-5001
34	PILOT VALVE HANDLE (RIGHT HAND) SUPERSEDES WELDED NUT CONNECTION ON HANDLE - MAY ALSO REQUIRE ITEM 31 - CONTACT FOR ADVICE	CU-4872-6001
35	PILOT LIGHT FLAME TUBE	CU-4872-9000
36	PILOT LIGHT JET	CU-4873-0000
37	PILOT LIGHT FLAME CUP (VAPOUR PILOT)	CU-4873-1000
38	IGNITER ASSEMBLY COMPLETE	CU-4873-3001
39	BLAST VALVE SPRING	CU-7553-0009
40	M5 x 16 RAISED CSK HEAD (SLOTTED)	CY-0005-5016
41	M6 x 10 CAP HEAD BOLT HEX SOCKET	CY-0006-3010
42	M6 x 20 CAP HEAD BOLT HEX SOCKET	CY-0006-3020
43	M6 x 6 GRUB SCREW HEX SOCKET	CY-0006-6006
44	M6 x 8 GRUB SCREW CONE POINT HEX SOCKET	CY-0006-6008
45	M8 x 50 HEX HEAD BOLT	CY-0008-0050
46	M8 LOCK NUT	CY-0008-1003
47	M8 DOME NUT	CY-0008-1006
48	M8 PLAIN WASHER	CY-0008-2008
49	LUBE SCREW 'O' RINGS	CB-2609-0000

Not all parts illustrated are held in stock and may have to be ordered especially - Please contact aftersales@cameronballoons.co.uk for any further information or advice.

DOUBLE/TRIPLE/QUAD VALVE FITTINGS

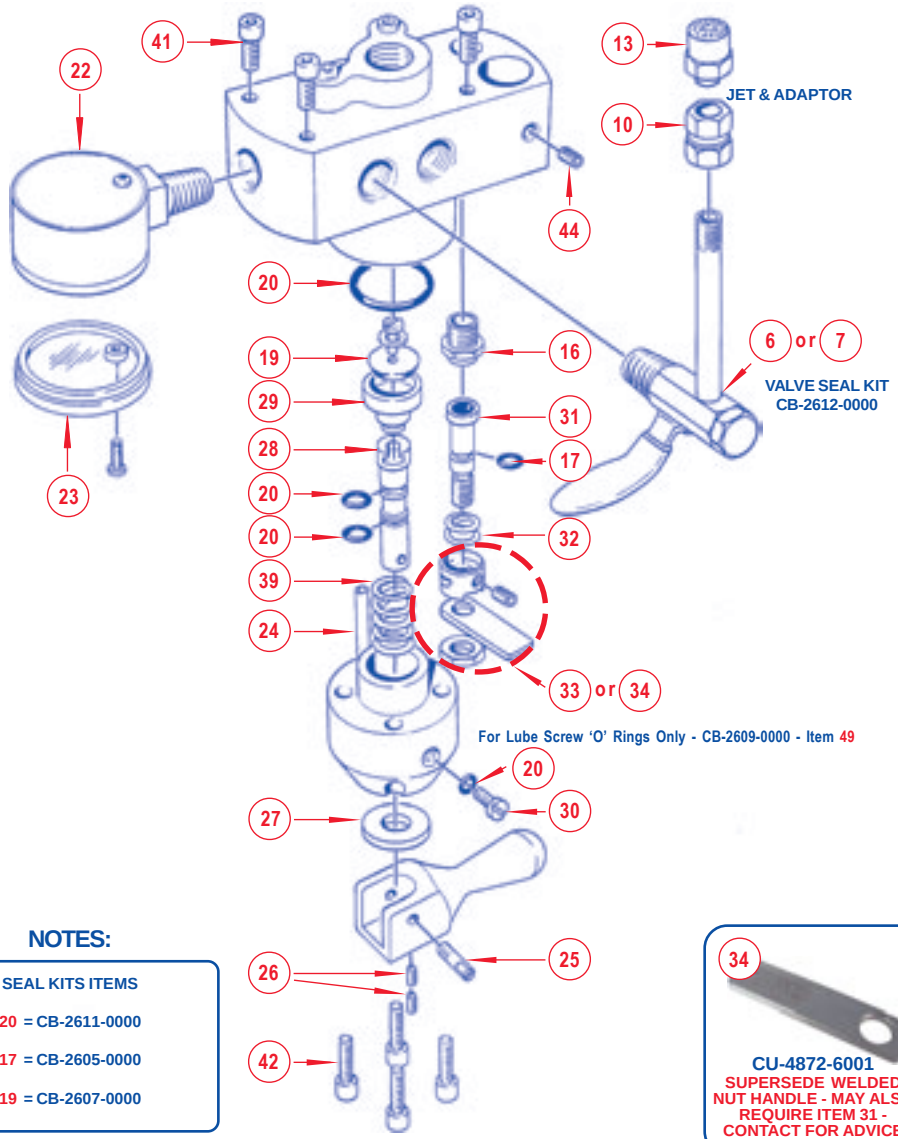

6 CB-0558-0001	7 CB-0558-0002	10 CB-0588-0003 FOR JET, SEE ITEM 13	13 CB-0924-0001 FOR ADAPTOR, SEE ITEM 10	16 CB-2493
17 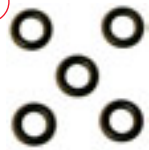 CB-2605-0000	19 CB-2607-0000	20 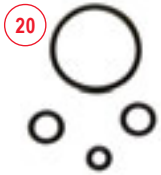 CB-2611-0000	22 CB-2887-0000	23 CU-2948-0002
24 CU-4870-6000	25 CU-4870-8000	26 CU-4870-9000	27 CU-4871-0000	28 CU-4871-1000
29 CU-4871-3000	30 CU-4871-8000	31 CU-4872-2000 PLEASE SPECIFY IF EXISTING HANDLE HAS A WELDED NUT OR A FREE NUT	32 CU-4872-4000	33 CU-4872-5001 SUPERSEDE WELDED NUT HANDLE - MAY ALSO REQUIRE ITEM 31 - CONTACT FOR ADVICE
34 CU-4872-6001 SUPERSEDE WELDED NUT HANDLE - MAY ALSO REQUIRE ITEM 31 - CONTACT FOR ADVICE	39 CU-7553-0009	41 CY-0006-3010	42 CY-0006-3020	44 CY-0006-6008
				49 CB-2609-0000

NOTES:

SEAL KITS ITEMS

20 = CB-2611-0000

17 = CB-2605-0000

19 = CB-2607-0000

Double/Triple/Quad Manifold, Coil, Jets, Crossflow and Handle Fittings

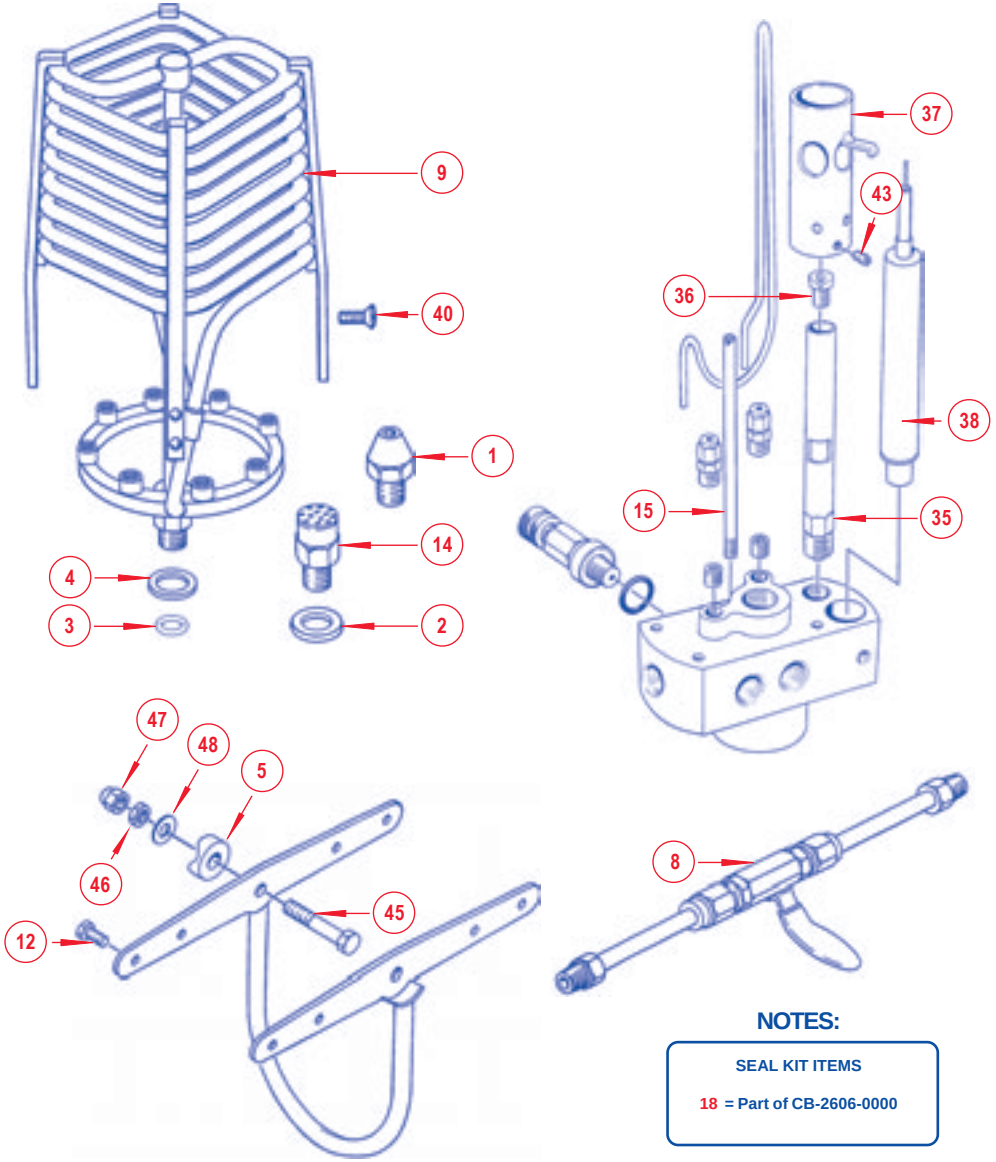

NOTES:

SEAL KIT ITEMS

18 = Part of CB-2606-0000

1 CB-0214-0003	2 CB-0214-0006	3 CB-0392-0021 OUTER	4 CB-0392-0022 INNER	5 CB-0543-0004 PLEASE SPECIFY TUBE Ø
8 CB-578		9 CB-0584-2000 (NO JETS) SPECIFY LH OR RH	12 CB-0737-0000	14 CB-0923-0001
15 CB-2140	18 CB-2606-0000	35 CU-4872-9000	36 CU-4873-0000	37 CU-4873-1000
38 CU-4873-3001		40 CY-0005-5016	43 CY-0006-6006	45 CY-0008-0050
46 CY-0008-1003	47 CY-0008-1006	48 CY-0008-2008		

Not all parts illustrated are held in stock and may have to be ordered especially - Please contact aftersales@cameronballoons.co.uk for any further information or advice.

Intentional Blank

COLT MKII / C2

Item No.	Description	Part No.
2	WORCESTER BALL VALVE	CB-0392-0017
3	WORCESTER BALL VALVE HANDLE (LEFT HAND)	CA-0000-8145LH
4	WORCESTER BALL VALVE HANDLE (RIGHT HAND)	CA-0000-8145RH
5	WOOD HANDLE TRIM (LIGHT)	CA-0000-8146L
9	WOOD HANDLE TRIM (DARK)	CA-0000-8146D
10	M6 x 10 CAP HEAD BOLT	CY-0006-3010
11	M6 WASHER	CY-0006-2008
12	M6 NYLOC NUT	CY-0006-1002
13	M6 x 90 BOLT	CY-0006-0090
19	TYPE 1520 MAIN JET	CA-0000-8014
20	MULTIHOLE MAIN JET (RETROFIT OPTION)	CA-0000-8345
21	WORCESTER VALVE SEAL KIT	CB-0392-0018
22	1/8 NPT x 8mm COMPRESSION FITTING	CA-0000-8165
25	¼ BSP COPPER GASKET	CA-0000-8201
26	¼ BSP DYNAQUIP BALL VALVE	CA-0000-8049
27	DYNAQUIP VALVE HANDLE (RED)	CA-0000-8140
31	¼ BSP SPACER	CA-0000-8064
35	TYPE 3060 JET	CA-0000-8136
36	¼ BSP TO ¼ BSP ADAPTOR	CA-0000-8302
42	¼ BSP KLINGER VALVE (RIGHT HAND)	CA-0000-8017
47	C2 PILOT FLAME TUBE	CA-0000-8023
48	PIEZO IGNITER	CA-0000-8105
49	IGNITER HOUSING	CA-0000-8020
52	CONE HOUSING	CA-0000-8052
57	ELECTRODE MOUNTING BRACKET	CA-0000-8031
58	M5 x 10 BOLT	CY-0005-0010
65	M6 x 25 BOLT	CY-0006-0025
67	M6 AEROTIGHT LOCK NUT	CY-0006-1004
69	12mm x 60mm STANDPIPE	CA-0000-8044
70	3/8 BSP COPPER GASKET	CA-0000-8198
71	3/8 BSP DYNAQUIP BALL VALVE	CA-0000-8147
72	DYNAQUIP VALVE HANDLE (GREEN)	CA-0000-8141
73	No6 x ½" SCREW	CA-0000-8184

Not all parts illustrated are held in stock and may have to be ordered especially - Please contact aftersales@cameronballoons.co.uk for any further information or advice.

Quick Reference Index

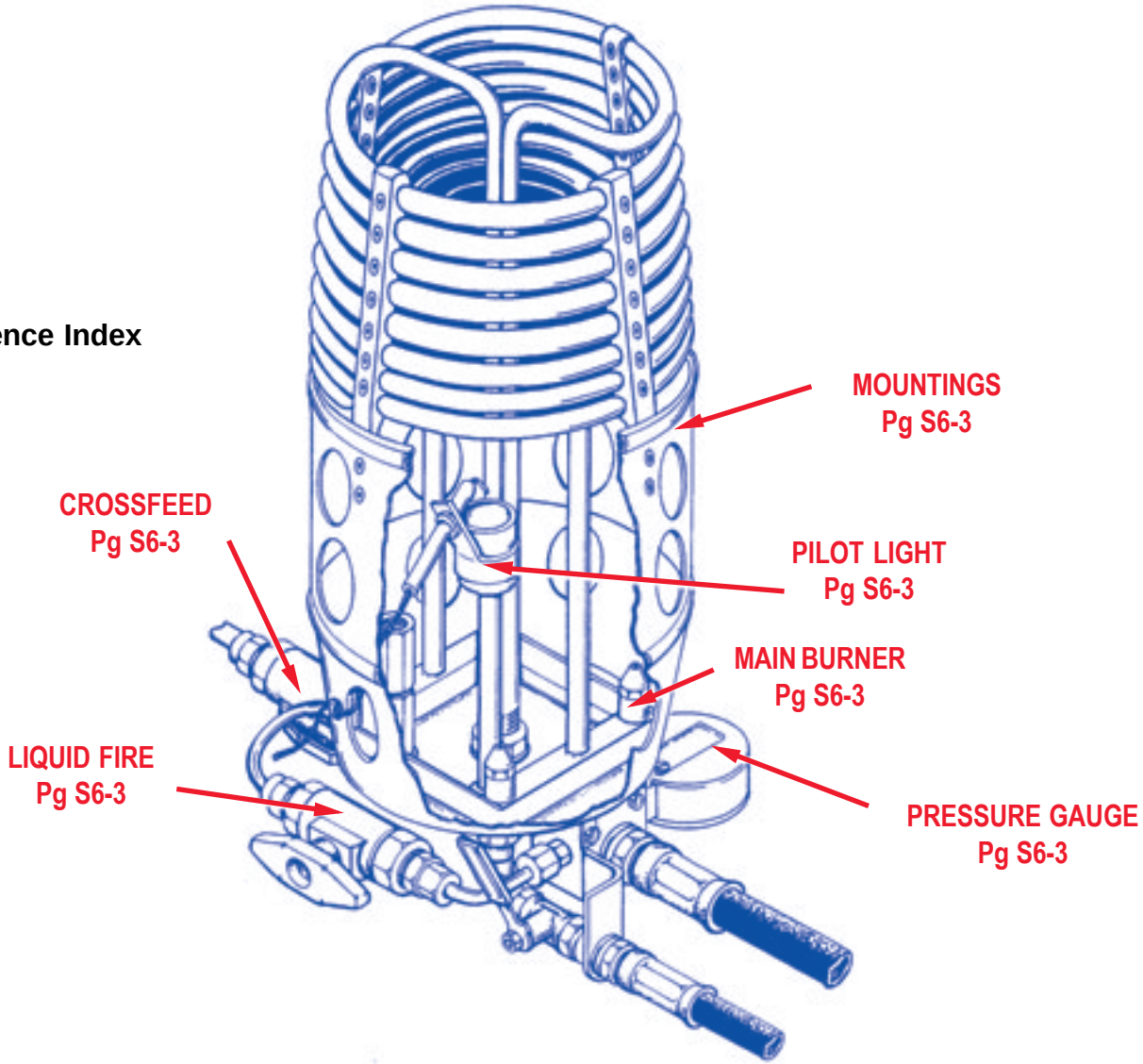

Main Valve, Crossfeed, Coil, Jet & Liquid Fire Assembly

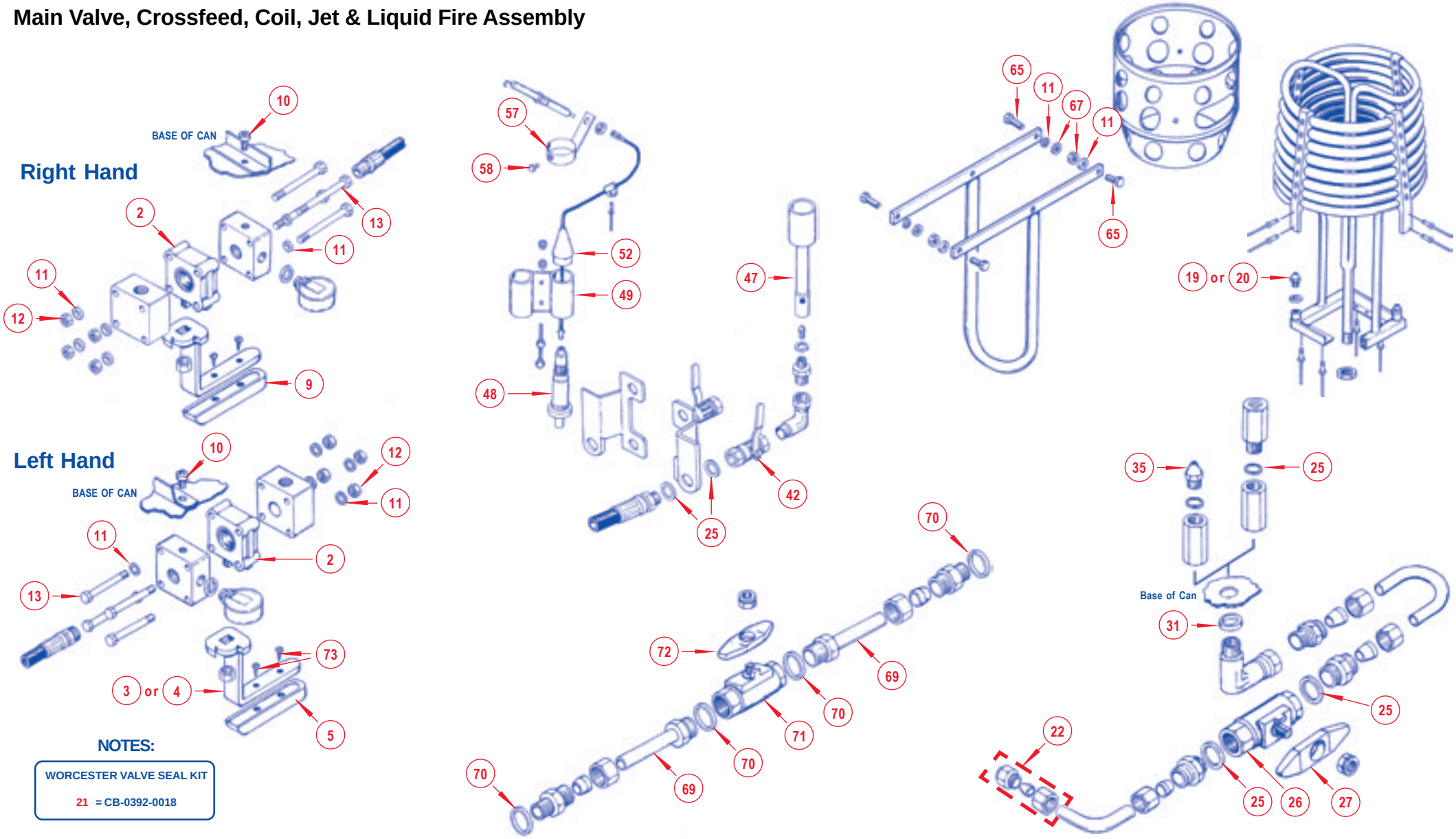

NOTES:

WORCESTER VALVE SEAL KIT

21 = CB-0392-0018

Not all parts illustrated are held in stock and may have to be ordered especially - Please contact aftersales@cameronballoons.co.uk for any further information or advice.

Main Valve, Crossfeed, Coil, Jet & Liquid Fire Assembly

2 CB-0392-0017	3 CA-0000-8145LH	4 CA-0000-8145RH	5 CA-0000-8146L	9 CA-0000-8146D	10 CY-0006-3010	11 CY-0006-2008	12 CY-0006-1002	13 CY-0006-0090
19 CA-0000-8014	20 CA-0000-8345	21 CB-0392-0018	22 CA-0000-8165	25 CA-0000-8201	26 CA-0000-8049	27 CA-0000-8140	31 CA-0000-8064	35 CA-0000-8136
42 CA-0000-8017	47 CA-0000-8023	48 CA-0000-8105	49 CA-0000-8020	52 CA-0000-8052	57 CA-0000-8031	58 CY-0005-0010	65 CY-0006-0025	67 CY-0006-1004
69 CA-0000-8044	70 CA-0000-8198	71 CA-0000-8147	72 CA-0000-8141	73 CA-0000-8184				

Main Valve, Liquid Fire, Coil & Piezo Igniter Assembly

Item No.	Description	Part No.
3	WORCESTER BALL VALVE	CB-0392-0017
4	WORCESTER BALL VALVE HANDLE (LEFT HAND)	CA-0000-8145LH
5	WORCESTER BALL VALVE HANDLE (RIGHT HAND)	CA-0000-8145RH
6	WOOD HANDLE TRIM (LIGHT)	CA-0000-8146L
10	M6 x 10 CAP HEAD BOLT	CY-0006-3010
11	M6 WASHER	CY-0006-2008
12	M6 NYLOC NUT	CY-0006-1002
14	WOOD HANDLE TRIM (DARK)	CA-0000-8146D
19	TYPE 1520 MAIN JET	CA-0000-8014
20	MULTIHOLE MAIN JET (RETROFIT OPTION)	CA-0000-8345
21	WORCESTER VALVE SEAL KIT	CB-0392-0018
22	1/8 NPT x 8mm COMPRESSION FITTING	CA-0000-8165
24	¼ BSP COPPER GASKET	CA-0000-8201
25	¼ BSP DYNAQUIP BALL VALVE	CA-0000-8049
26	DYNAQUIP VALVE HANDLE (RED)	CA-0000-8140
30	¼ BSP SPACER	CA-0000-8064
37	¼ BSP KLINGER VALVE	CA-0000-8017
41	C2 PILOT FLAME TUBE	CA-0000-8023
42	PIEZO IGNITER	CA-0000-8105
43	CONE HOUSING	CA-0000-8052
47	ELECTRODE MOUNTING BRACKET	CA-0000-8031
49	M5 x 10 BOLT	CY-0005-0010
51	No6 x ½" SCREW	CA-0000-8184

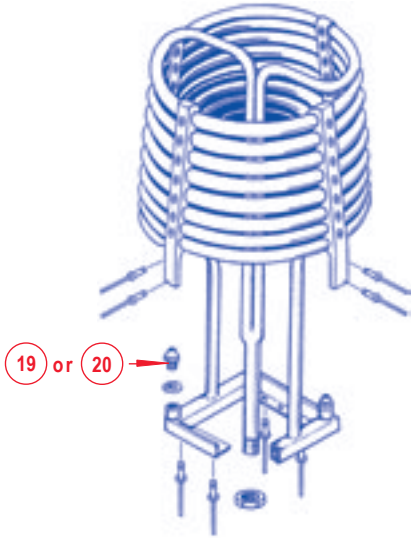

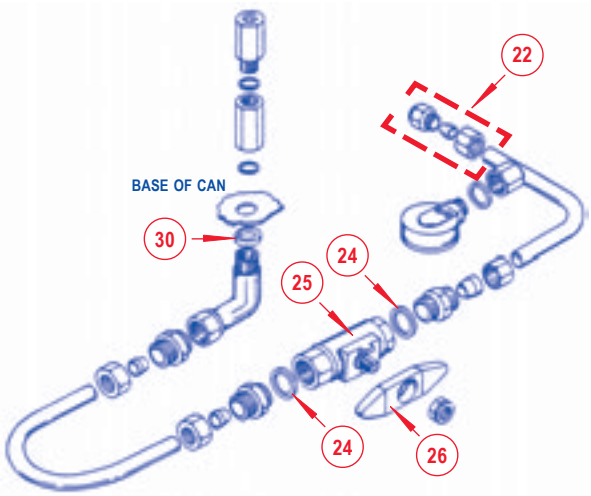

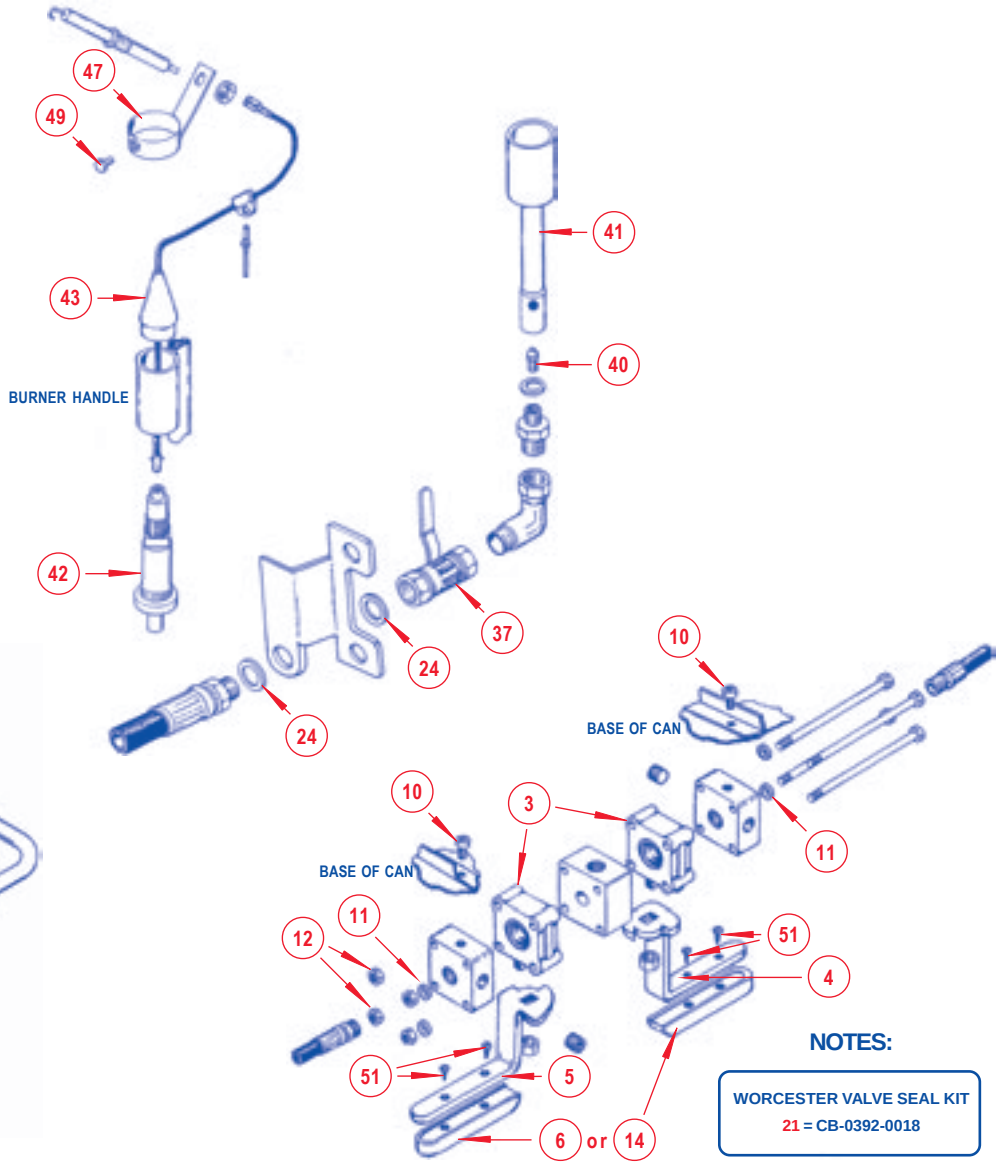

NOTES:

WORCESTER VALVE SEAL KIT
21 = CB-0392-0018

Not all parts illustrated are held in stock and may have to be ordered especially - Please contact aftersales@cameronballoons.co.uk for any further information or advice.

Main Valve, Liquid Fire, Coil & Piezo Igniter Assembly

3 CB-0392-0017	4 CA-0000-8145LH	5 CA-0000-8145RH	6 CA-0000-8146L	10 CY-0006-3010	11 CY-0006-2008	12 CY-0006-1002	14 CA-0000-8146D	19 CA-0000-8014
20 CA-0000-8345	21 CB-0392-0018	22 CA-0000-8165	24 CA-0000-8201	25 CA-0000-8049	26 CA-0000-8140	30 CA-0000-8064	37 CA-0000-8017	41 CA-0000-8023
42 CA-0000-8105	43 CA-0000-8052	47 CA-0000-8031	49 CY-0005-0010	51 CA-0000-8184				

Not all parts illustrated are held in stock and may have to be ordered especially - Please contact aftersales@cameronballoons.co.uk for any further information or advice.

Item No.	Description	Part No.
3	3/8 BSP COPPER GASKET	CA-0000-8198
4	3/8 BSPM TO 3/8 BSPM ADAPTOR	CA-0001-0018
5	M6 x 90 BOLT	CY-0006-0090
6	M6 WASHER	CY-0006-2008
9	4BA x 3/8 PAN HEAD BOLT	CA-0000-8130
10	WORCESTER BALL VALVE HANDLE (LEFT HAND)	CA-0000-8145LH
11	WORCESTER BALL VALVE HANDLE (RIGHT HAND)	CA-0000-8145RH
13	WOOD HANDLE TRIM (LIGHT)	CA-0000-8146L
14	WOOD HANDLE TRIM (DARK)	CA-0000-8146D
15	WORCESTER BALL VALVE	CB-0392-0017
17	M6 x 10 SOCKET BOLT	CY-0006-3010
18	M6 AEROTIGHT NUT	CY-0006-1004
20	1.3mm MAIN JET	CA-0000-8091
21	1.6mm MAIN JET	CA-0000-8011
22	WORCESTER VALVE SEAL KIT	CB-0392-0018
23	¼ BSP COPPER GASKET	CA-0000-8201
25	¼ BSP DYNAQUIP BALL VALVE	CA-0000-8049
26	DYNAQUIP VALVE HANDLE (RED)	CA-0000-8140
32	TYPE 3060 JET	CA-0000-8136
35	VAPORISER SPRING	CA-0000-8101
36	PISTON END SEAL	CB-8552-0000
37	MAGNUM VAPORISER SEAL KIT	CB-8635-0000
39	VAPORISER OUTLET BODY	CA-0000-8259
41	HOKE VALVE NO REPAIR KIT IS AVAILABLE FOR THE HOKE VALVE	CA-0000-8109
42	SINTERED FILTER (6MM DIAMETER)	CA-0000-8154
43	1/8 BSP TO 1/8 BSP ADAPTOR TAPPED 1BA	CA-0000-8090
44	LIQUID PILOT LIGHT JET	CB-8550-0000
45	PILOT FLAME TUBE	CA-0000-8112
46	PIEZO IGNITER	CA-0000-8105
47	IGNITER HOUSING	CA-0000-8106
48	C3 ELECTRODE	CA-0000-8290
49	1/8 NPTM x 1/8 COMPRESSION FITTING	CB-2472-0002
51	1/8 NPTF x 1/8 COMPRESSION FITTING	CB-8589-0000
53	PRESSURE GAUGE BRACKET	CA-0000-8238
55	PRESSURE GAUGE	CB-8590-0000
59	M6 x 25 BOLT	CY-0006-0025
60	M6 x 45 BOLT	CY-0006-0045
64	12mm x 60mm STANDPIPE	CA-0000-8044
65	3/8 BSP DYNAQUIP BALL VALVE	CA-0000-8147
66	DYNAQUIP VALVE HANDLE (GREEN)	CA-0000-8141
67	No6 x ½" SCREW	CA-0000-8184

Not all parts illustrated are held in stock and may have to be ordered especially - Please contact aftersales@cameronballoons.co.uk for any further information or advice.

Quick Reference Index

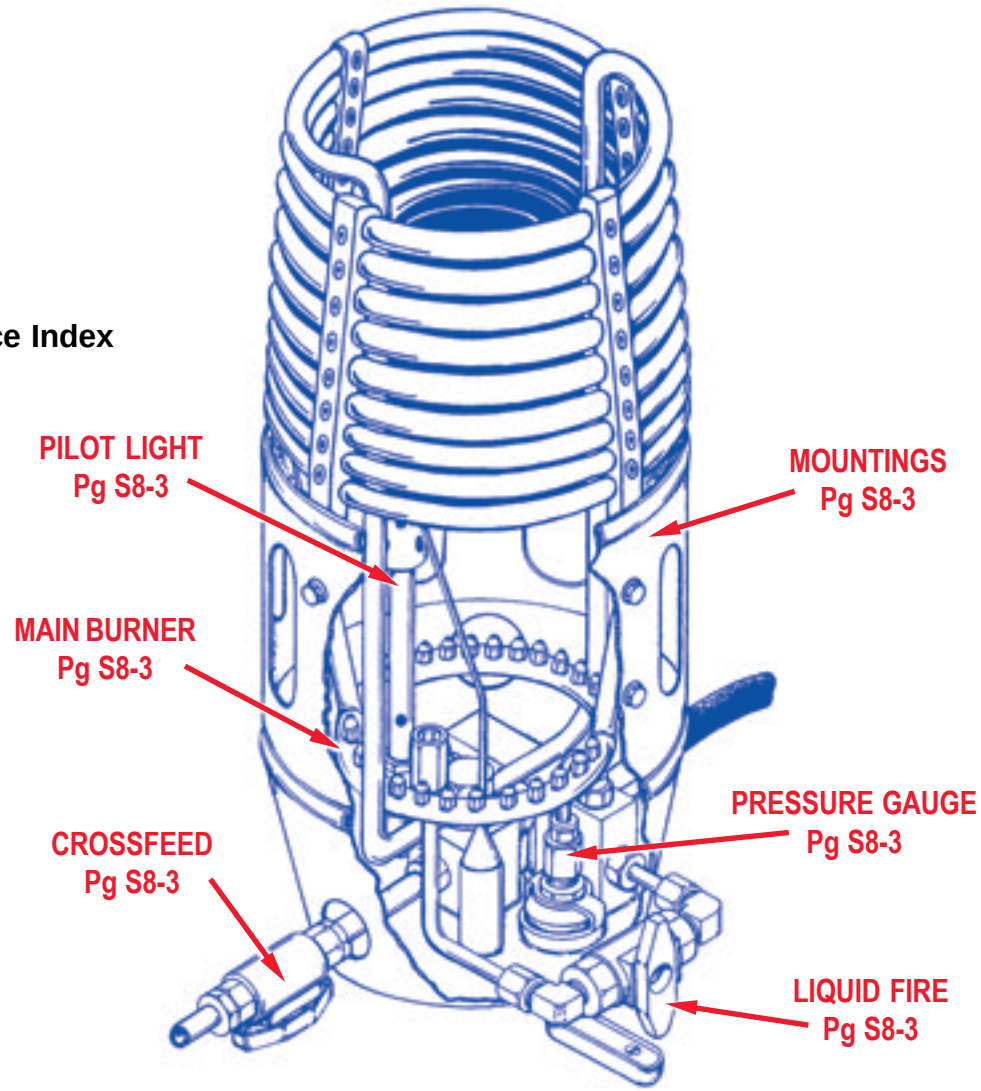

Main Valve, Liquid Fire, Coil, Jet, Crossfeed, Piezo Igniter & Pressure Gauge Assembly

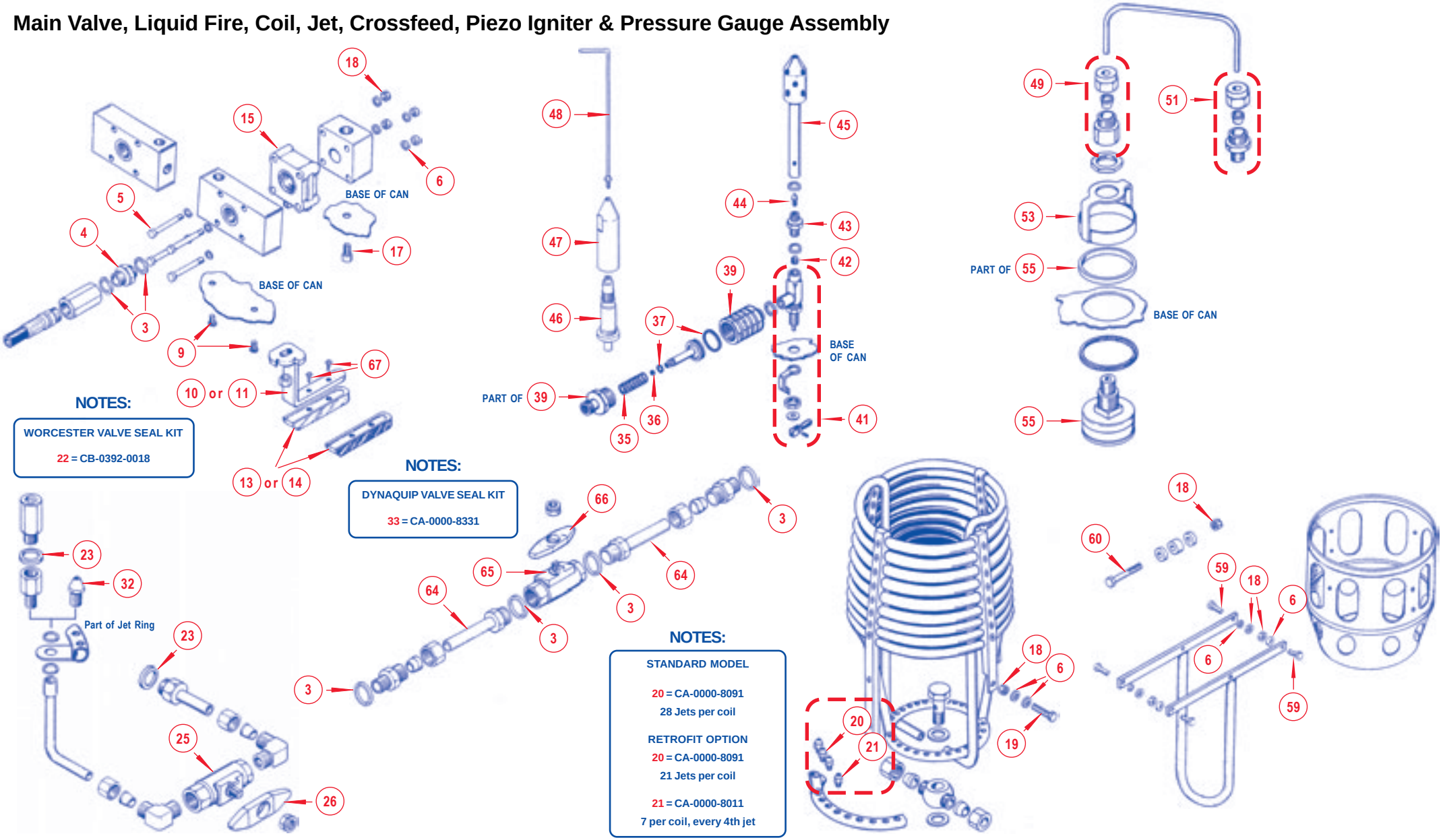

NOTES:

WORCESTER VALVE SEAL KIT

22 = CB-0392-0018

NOTES:

DYNAQUIP VALVE SEAL KIT

33 = CA-0000-8331

NOTES:

STANDARD MODEL

20 = CA-0000-8091
28 Jets per coil

RETROFIT OPTION
20 = CA-0000-8091
21 Jets per coil

21 = CA-0000-8011
7 per coil, every 4th jet

Not all parts illustrated are held in stock and may have to be ordered especially - Please contact aftersales@cameronballoons.co.uk for any further information or advice.

Main Valve, Liquid Fire, Coil, Jet, Crossfeed, Piezo Igniter & Pressure Gauge Assembly

3	4	5	6	9	10	11	13	14
CA-0000-8198	CA-0001-0018	CY-0006-0090	CY-0006-2008	CA-0000-8130	CA-0000-8145LH	CA-0000-8145RH	CA-0000-8146L	CA-0000-8146D
15	17	18	20	21	22	23	25	26
CB-0392-0017	CY-0006-3010	CY-0006-1004	CA-0000-8091	CA-0000-8011	CB-0392-0018	CA-0000-8201	CA-0000-8049	CA-0000-8140
32	35	36	37	39	41	42	43	44
CA-0000-8136	CA-0000-8101	CB-8552-0000	CB-8635-0000	CA-0000-8259	CA-0000-8109	CA-0000-8154 6MM DIA.	CA-0000-8090	CB-8550-0000
45	46	47	48	49	51	53	55	59
CA-0000-8112	CA-0000-8105	CA-0000-8106	CA-0000-8290	CB-2472-0002	CB-8589-0000	CA-0000-8238	CB-8590-0000	CY-0006-0025
60	64	65	66	67				
CY-0006-0045	CA-0000-8044	CA-0000-8147	CA-0000-8141	CA-0000-8184				

Item No.	Description	Part No.
5	VALVE SPRING	CU-7553-0009
6	VALVE STEM	CA-0000-8210
7	M8 WASHER	CY-0008-2008
9	WEAR PAD	CA-0000-8227
12	4mm ROLL PIN	CA-0000-8220
13	TOGGLE / PIVOT PIN	CA-0000-8299
14	TOGGLE / PIVOT PIN CIRCLIP (5MM)	CA-0000-8300
16	M5 x 45 CAP HEAD BOLT	CY-0005-3045
17	LIGHT WOOD HANDLE (LEFT HAND)	CA-0000-8222
18	SLURPER TUBE (LEFT HAND)	CA-0000-8193L
19	SLURPER TUBE (RIGHT HAND)	CA-0000-8193R
20	3/8 BSP COPPER GASKET	CA-0000-8198
21	M6 AEROTIGHT NUT	CY-0006-1004
22	M6 WASHER	CY-0006-2008
24	1.3mm MAIN JET	CA-0000-8091
25	1.6mm MAIN JET	CA-0000-8011
27	BANJO BOLT	CA-0000-8196
28	COPPER GASKET	CA-0000-8245
29	MAGNUM MAIN VALVE SEAL KIT	CB-8634-0000
30	¼ BSP COPPER GASKET	CA-0000-8201
31	¼ BSP THREADED INSERT	CA-0000-8241
33	ALUMINIUM STOP TUBE	CA-0000-8244
34	DYNAQUIP VALVE HANDLE (RED)	CA-0000-8140
36	LEGRIS BALL VALVE SEAL KIT	CA-0000-8342
42	PISTON END SEAL	CB-8552-0000
43	VAPORISER SPRING	CA-0000-8101

Item No.	Description	Part No.
44	MAGNUM VAPORISER SEAL KIT	CB-8635-0000
46	VAPORISER OUTLET BODY	CA-0000-8259
47	LIQUID PILOT LIGHT JET	CB-8550-0000
49	PILOT FLAME TUBE	CA-0000-8112
51	VENT TUBE	CA-0000-8233
53	O-RING (STOP PLATE WATER SEAL) (I.D. 30 x Ø1.5) (DOWTY No 206-030)	CA-0000-8296
56	PILOT LIGHT VALVE STEM (PRE MOD T157)	CA-0000-8317
60	PILOT VALVE HANDLE (YELLOW)	CA-0000-8232
61	M5 x 13 CSK HEAD BOLT	CY-0005-5013
63	PIEZO IGNITER	CA-0000-8105
64	IGNITER HOUSING (PRE MOD T157)	CA-0000-8106
65	C3 ELECTRODE (PRE MOD T157)	CA-0000-8290
66	IGNITER INSULATOR	CA-0000-8310
67	M22 THIN NUT	CA-0000-8307
68	NYLON WASHER	CA-0000-8306
71	CERAMIC TUBE	CA-0000-8282
73	1/8 NPTM x 1/8 COMPRESSION FITTING	CB-2472-0002
75	1/8 NPTF x 1/8 COMPRESSION FITTING	CB-8589-0000
77	PRESSURE GAUGE BRACKET	CA-0000-8238
79	PRESSURE GAUGE	CB-8590-0000
83	M6 x 25 BOLT	CY-0006-0025
86	M6 x 45 BOLT	CY-0006-0045
90	12mm x 60mm STANDPIPE	CA-0000-8044
92	3/8 BSP DYNAQUIP BALL VALVE	CA-0000-8147
93	DYNAQUIP VALVE HANDLE (GREEN)	CA-0000-8141

Not all parts illustrated are held in stock and may have to be ordered especially - Please contact aftersales@cameronballoons.co.uk for any further information or advice.

Quick Reference Index

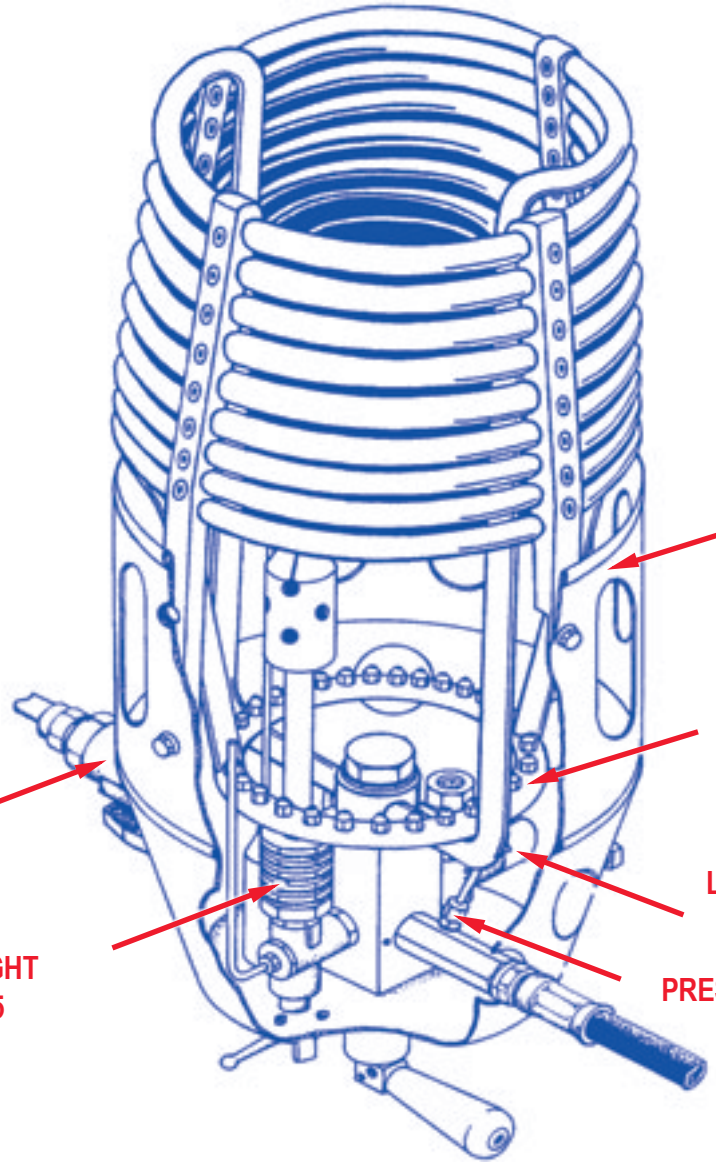

Toggle Valve, Coils, Handle, Crossfeed and Jet Assembly

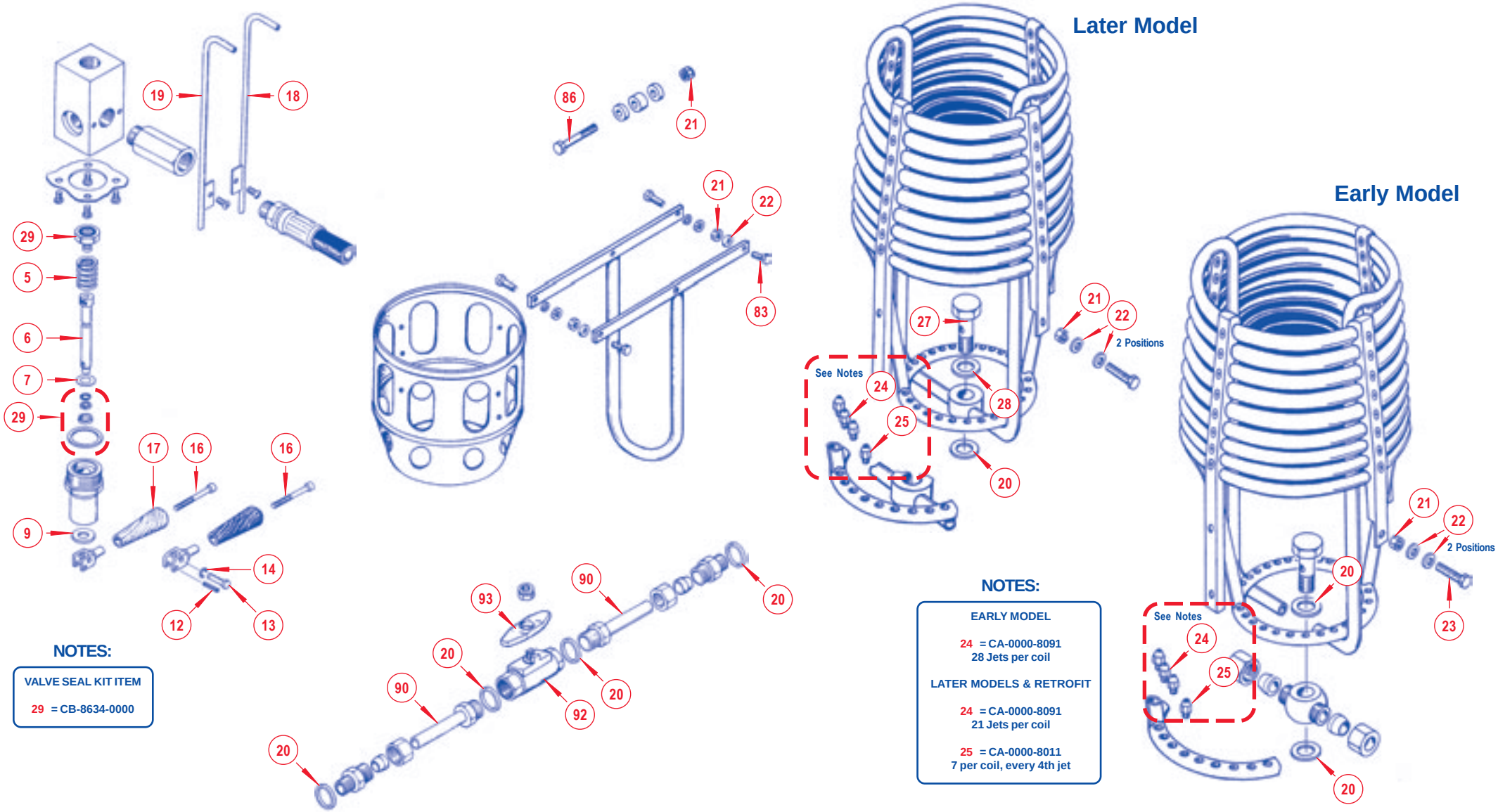

NOTES:

VALVE SEAL KIT ITEM

29 = CB-8634-0000

NOTES:

EARLY MODEL

24 = CA-0000-8091
28 Jets per coil

LATER MODELS & RETROFIT

24 = CA-0000-8091
21 Jets per coil

25 = CA-0000-8011
7 per coil, every 4th jet

Not all parts illustrated are held in stock and may have to be ordered especially - Please contact aftersales@cameronballoons.co.uk for any further information or advice.

Toggle Valve, Coils, Handle, Crossfeed and Jet Assembly

5 CU-7553-0009	6 CA-0000-8210	7 CY-0008-2008	9 CA-0000-8227	12 CA-0000-8220	13 CA-0000-8299	14 CA-0000-8300	16 CY-0005-3045	17 CA-0000-8222
18 CA-0000-8193L (LH)	19 CA-0000-8193R (RH)	20 CA-0000-8198	21 CY-0006-1004	22 CY-0006-2008	24 CA-0000-8091	25 CA-0000-8011	27 CA-0000-8196	28 CA-0000-8245
29 CB-8634-0000	83 CY-0006-0025	86 CY-0006-0045	90 CA-0000-8044	92 CA-0000-8147	93 CA-0000-8141			

Liquid Fire, Pilot Light Valve, Pilot Light & Piezo Assembly

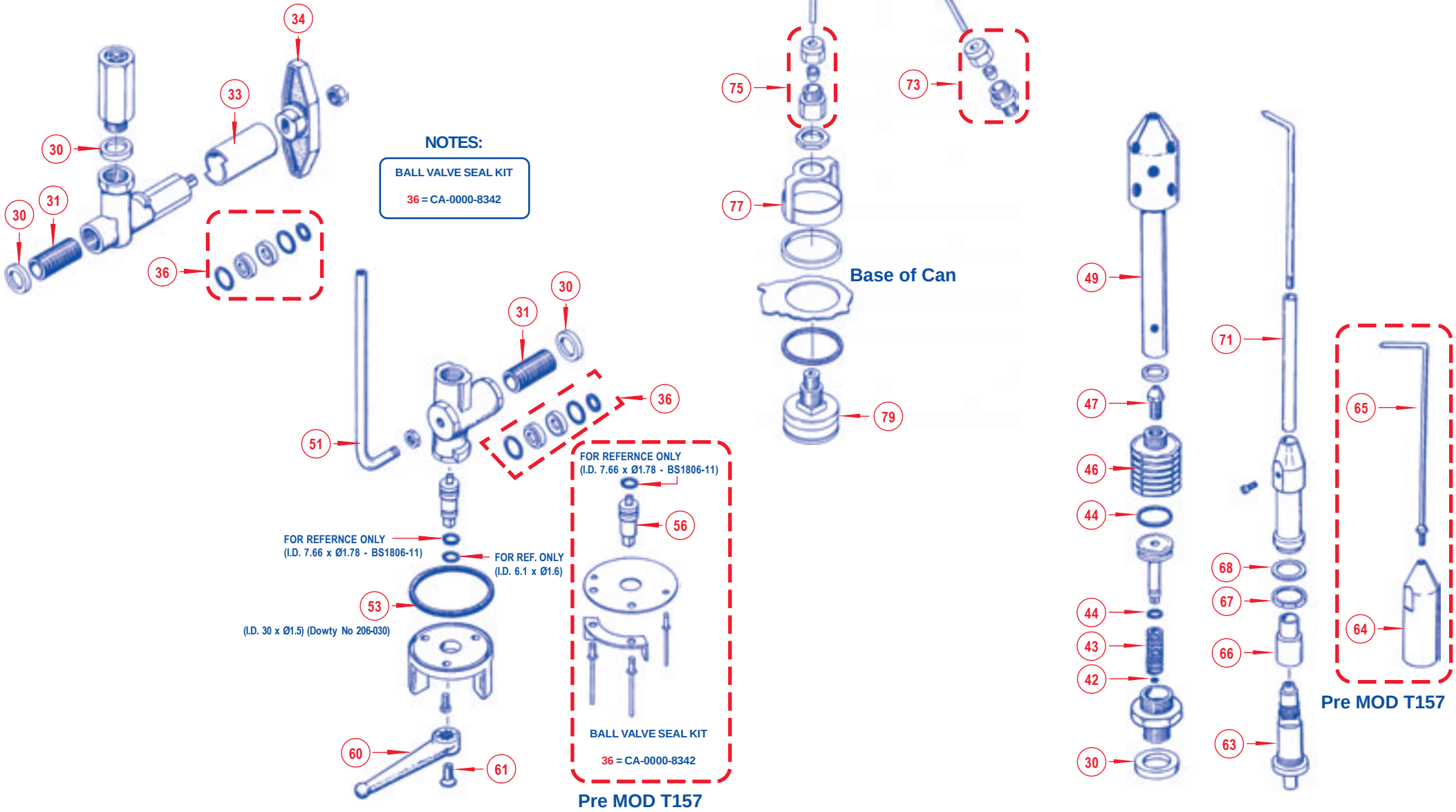

Not all parts illustrated are held in stock and may have to be ordered especially - Please contact aftersales@cameronballoons.co.uk for any further information or advice.

Liquid Fire, Pilot Light Valve, Pilot Light & Piezo Assembly

30 CA-0000-8201	31 CA-0000-8241	33 CA-0000-8244	34 CA-0000-8140	36 CA-0000-8342	42 CB-8552-0000	43 CA-0000-8101	44 CB-8635-0000	46 CA-0000-8259
47 CB-8550-0000	49 CA-0000-8112	51 CA-0000-8233	53 CA-0000-8296	56 CA-0000-8317 PRE MOD T157	60 CA-0000-8232	61 CY-0005-5013	63 CA-0000-8105	64 CA-0000-8106 PRE MOD T157
65 CA-0000-8290 PRE MOD T157	66 CA-0000-8310	67 CA-0000-8307	68 CA-0000-8306	71 CA-0000-8282	73 CB-2472-0002	75 CB-8589-0000	77 CA-0000-8238	79 CB-8590-0000

FUEL SYSTEM - HOSES

Item No.	Description	Part No.
	SHADOW, STEALTH, SIROCCO, MK4 SUPER LIQUID HOSE ASSY (3/8 NOMINAL BORE)	
	HOSES WITH SWAGED END FITTINGS, REGO, (NO COUPLINGS)	
1	ø3/8, ¼NPT - ¼NPT, 2.6M (DOUBLE)	CB-7626-1100
2	ø3/8, ¼NPT - ¼NPT, 4.0M (TRIPLE/QUAD)	CB-7640-1100
	HOSES WITH SWAGED END FITTINGS, TEMA, (NO COUPLINGS)	
3	ø3/8, ¼NPT - 3/8BSP (G3/8), 2.6M (DOUBLE)	CB-7626-1400
4	ø3/8, ¼NPT - 3/8BSP (G3/8), 4.0M (TRIPLE/QUAD)	CB-7640-1400
	HOSES, COMPLETE WITH ONE REGO COUPLING	
5	ø3/8, ¼NPT - ¼NPT, 2.6M, REGO COUPLING (DOUBLE)	CB-7626-1110
6	ø3/8, ¼NPT - ¼NPT, 4.0M, REGO COUPLING (TRIPLE / QUAD)	CB-7640-1110
	HOSES, COMPLETE WITH ONE TEMA COUPLING	
7	ø3/8, ¼NPT - 3/8BSP (G3/8), 2.6M, TEMA (DOUBLE)	CB-7626-1420
8	ø3/8, ¼NPT - 3/8BSP (G3/8), 4.0M, TEMA (TRIPLE/QUAD)	CB-7640-1420
	STRATUS, MAGNUM (C3T), C3 (MKIII), C2 (MKII) LIQUID HOSE ASSY (3/8 NOMINAL BORE)	
	HOSES WITH SWAGED END FITTINGS, REGO, (NO COUPLINGS)	
3	ø3/8, ¼NPT - 3/8BSP (G3/8), 2.6M (DOUBLE)	CB-7626-1400
4	ø3/8, ¼NPT - 3/8BSP (G3/8), 4.0M (TRIPLE/QUAD)	CB-7640-1400
	HOSES WITH SWAGED END FITTINGS, TEMA, (NO COUPLINGS), TEMA	
9	ø3/8, 3/8BSP - 3/8BSP (G3/8), 2.6M (DOUBLE)	CB-7626-4400
10	ø3/8, 3/8BSP - 3/8BSP (G3/8), 4.0M (TRIPLE/QUAD)	CB-7640-4400
	HOSES, COMPLETE WITH ONE REGO COUPLING	
11	ø3/8, ¼NPT - 3/8BSP, 2.6M, REGO COUPLING (DOUBLE)	CB-7626-1410
12	ø3/8, ¼NPT - 3/8BSP, 4.0M, REGO COUPLING (TRIPLE/QUAD)	CB-7640-1410
	HOSES, COMPLETE WITH ONE TEMA COUPLING	
13	ø3/8, 3/8BSP - 3/8BSP, 2.6M, TEMA COUPLING (DOUBLE)	CB-7626-4420
14	ø3/8, 3/8BSP - 3/8BSP, 4.0M, TEMA COUPLING (TRIPLE/QUAD)	CB-7640-4420
	STRATUS, TRIPLE/QUAD, CROSSFLOW LIQUID HOSE ASSY, TEMA ONLY (½ NOMINAL BORE)	
	HOSES WITH SWAGED END FITTINGS (NO COUPLINGS)	
*15	ø3/8, 3/8BSP - 3/8BSP (G3/8), 4.0M (TRIPLE/QUAD)	CB-7840-4400
	HOSES, COMPLETE WITH ONE TEMA COUPLING	
*16	ø3/8, 3/8BSP - 3/8BSP, 4.0M, TEMA COUPLING (TRIPLE/QUAD)	CB-7840-4420

*** IMPORTANT:**
ITEMS 15 & 16 MUST BE USED ON TRIPLE & QUAD BURNERS WHEN FITTED WITH CROSSFEED

Item No.	Description	Part No.
	SHADOW, STEALTH, MK4 SUPER VAPOUR HOSE ASSY (¼ NOMINAL BORE)	
17	ø¼, ¼NPT - DYNAQUIP MALE, 1.8M (DOUBLE)	CB-7418-1800
18	ø¼, ¼NPT - DYNAQUIP MALE, *.*M (TRIPLE/QUAD)	CB-74**-1800
19	ø¼, ¼NPT - TEMA MALE, 1.8M (DOUBLE)	CB-7418-1700
20	ø¼, ¼NPT - TEMA MALE, *.*M (TRIPLE/QUAD)	CB-74**-1700
	*.*M = PLEASE SPECIFY HOSE LENGTH REQUIRED	
	MAGNUM (C3T), C3 (MKIII), C2 (MKII) VAPOUR HOSE ASSY (¼ NOMINAL BORE)	
21	ø¼, ¼BSP - DYNAQUIP MALE, 1.8M (DOUBLE)	CB-7418-2800
22	ø¼, ¼BSP - DYNAQUIP MALE, *.*M (TRIPLE/QUAD)	CB-74**-2800
23	ø¼, ¼BSP - TEMA MALE, 1.8M (DOUBLE)	CB-7418-2700
24	ø¼, ¼BSP - TEMA MALE, 1.8M (TRIPLE/QUAD)	CB-74**-2700
	.= PLEASE SPECIFY HOSE LENGTH REQUIRED	
	6LB VAPOUR CYLINDER	
168	ø¼, ¼NPT - DYNAQUIP MALE, 0.6M	CB-7406-1800
169	ø¼, ¼NPT - TEMA MALE, 0.6M	CB-7406-2700
	MANIFOLD SYSTEMS	
25	MANIFOLD - 2 CYL - 1 X REGO MALE TO 2 X REGO FEMALE	CB-0440-1000
26	MANIFOLD - 2 CYL - REGO - ALTERATIVE ASSEMBLY	CB-0440-5000
27	MANIFOLD - 2 CYL - 1 X TEMA MALE TO 2 X TEMA FEMALE	CB-0440-3000
28	MANIFOLD - 2 CYL - 1 X TEMA MALE TO 2 X REGO FEMALE	CB-0440-7000
29	MANIFOLD - 3 CYL - 1 X REGO MALE TO 3 X REGO FEMALE	CB-0440-2000
30	MANIFOLD - 3 CYL - 1 X TEMA MALE TO 3 X TEMA FEMALE	CB-0440-4000
31	MANIFOLD - 3 CYL - REGO - ALTERNATIVE ASSEMBLY	CB-0440-6000
32	MANIFOLD - 3 CYL - 1 X TEMA MALE TO 3 X REGO FEMALE	CB-0440-8000
	BARE MANIFOLD HOSE ONLY	
33	0.3M MANIFOLD HOSE (REGO) - ¼NPT / ¼NPT	CB-7603-1100
34	0.3M MANIFOLD HOSE (TEMA) - ¼NPT / 3/8BSP	CB-7603-1400
35	0.5M MANIFOLD HOSE (REGO) - ¼NPT / ¼NPT	CB-7605-1100
36	0.5M MANIFOLD HOSE (TEMA) - ¼NPT / 3/8BSP	CB-7605-1400

CUSTOM HOSE LENGTHS ARE AVAILABLE.

THE THIRD AND FOURTH DIGITS OF THE PART NO. REPRESENT THE LENGTH OF THE HOSE IN DECIMETRES. FOR EXAMPLE: A LIQUID HOSE, 3.1M LONG, FOR SHADOW DOUBLE WOULD BE CB-7631-1100

Not all parts illustrated are held in stock and may have to be ordered especially - Please contact aftersales@cameronballoons.co.uk for any further information or advice.

FUEL SYSTEM - REFUELLING

Item No.	Description	Part No.
	REFUELLING HOSES	
65	REGO - CARGAS ¾BSP BAYONET ADAPTOR	CB-2579-0001
66	REGO - REGO 76475C BAYONET ADAPTOR	CB-2579-0003
67	REGO - 1¾ ACME CARGAS - TYPE 2 (GERMANY/IRELAND)	CB-2579-0004
68	REGO - CARGAS ADAPTOR - TYPE 3 (FRANCE/ITALY)	CB-2579-0005
69	TEMA - CARGAS ¾BSP BAYONET ADAPTOR	CB-2579-0002
70	TEMA - REGO 76475C BAYONET ADAPTOR	CB-2579-0006
71	TEMA - 1¾ ACME CARGAS - TYPE 2 (GERMANY/IRELAND)	CB-2579-0007
72	TEMA - CARGAS ADAPTOR - TYPE 3 (FRANCE/ITALY)	CB-2579-0008
	ITEMS 65 TO 72 - STANDARD HOSE LENGTH IS 1.8M CUSTOM HOSE LENGTHS ARE AVAILABLE - PLEASE SPECIFY	
73	REGO 7141M (MALE) - REGO 7141M (MALE)	CB-76**-1144
74	REGO 7141F (FEMALE) - REGO 7141F (FEMALE)	CB-76**-1111
75	REGO 7141M (MALE) - REGO 7141F (FEMALE)	CB-76**-1114
76	TEMA 3800 FEMALE - TEMA 3800 FEMALE	CB-76**-1422
77	REGO 7141F - TEMA 3800 FEMALE	CB-76**-1412
78	REGO 7141M - TEMA 3800 FEMALE	CB-76**-1414
	THE THIRD AND FOURTH DIGITS OF THE PART NO. REPRESENT THE LENGTH OF THE HOSE IN DECIMETRES. FOR EXAMPLE: A LIQUID HOSE, 3.1M LONG, FOR SHADOW DOUBLE WOULD BE CB-7631-1100 ITEMS 73 TO 78 - CUSTOM HOSE LENGTHS ARE AVAILABLE - PLEASE SPECIFY	
200	UNIVERSAL REFUELLING KIT REGO (MALE) TO UK POL (MALE) HOSE, 1.8m	CH-6000-1000
	CONTAINS THE FOLLOWING ADAPTORS: UK POL - LIPTON COUPLING, UK POL - REGO FEMALE COUPLING BM144, UK POL - US POL, UK POL - CARGAS ¾BSP BAYONET, UK POL - CONTINENTAL FITTING	
300	UNIVERSAL REFUELLING KIT - TEMA TO UK POL (MALE) HOSE, 1.8m	CH-6000-2000
	CONTAINS THE FOLLOWING ADAPTORS: UK POL - TEMA FEMALE, UK POL - LIPTON COUPLING, UK POL - US POL, UK POL - CARGAS ¾BSP BAYONET, UK POL - CONTINENTAL FITTING	

FUEL SYSTEM - CONNECTIONS/MISC

Item No.	Description	Part No.
37	REDUCING NIPPLE	CB-0440-0007
38	3-WAY T FOR MANIFOLDS	CB-0440-0005
39	4-WAY T FOR MANIFOLDS	CB-0440-0006
40	WAVERLEY REDUCER - 3/8BSP MALE - ¼NPT MALE	CB-0440-0017
41	7141M MOD FOR 6LB CYLINDER	CH-7141-0003
42	REGO 7141F DUST CAP	CH-7141-9000
43	REGO FEMALE COUPLING BM144	CH-0144-0001
44	DYNAQUIP PLUG FOR PILOT HOSE	CB-8419-0000
45	¼" FEMALE NPT COUPLING	CH-5000-0003
46	BONNANO PROPANE FILTER	CB-2894-0000
47	UK POL NUT	CH-6000-0005
48	US POL NUT	CH-6000-0007
49	CONTINENTAL REFUELLING FITTING	CH-6000-0008
50	DOWTY SEAL PP45-F	CH-6000-0010
51	CARGAS REFUELLING HOSE - ¾BSP FEMALE BARREL NUT	CH-6000-0011
52	CARGAS REGO 76475C BAYONET ADAPTOR	CH-6000-0012
53	UK POL FEMALE CONNECTOR	CH-6000-0013
54	CARGAS FRENCH ADAPTOR - TYPE 3	CH-6000-0014
55	UK / US POL NIPPLE	CH-6000-0017
57	¾BSP MALE - ¼NPT FEMALE ADAPTOR	CH-6000-0021
58	CARGAS ¾BSP BAYONET ADAPTOR	CH-6000-0023
59	CARGAS - FORECOURT BAYONET ADAPTOR	CH-6000-0024
60	1¾ ACME CARGAS ADAPTOR - TYPE 2	CH-6000-0025
61	RETROFIT HOSE PROTECTION SLEEVE KIT	CQ-2013-9000
62	HOOK AND LOOP CABLE TIE 325MM	CH-1000-0002
63	NITROGEN KIT (REGO)	CH-0000-0014
64	NITROGEN KIT (TEMA)	CH-0000-0015

Not all parts illustrated are held in stock and may have to be ordered especially - Please contact aftersales@cameronballoons.co.uk for any further information or advice.

FUEL SYSTEM - MISCELLANEOUS

IMPORTANT:
A range of different cylinder types exist and it is important to identify the correct type concerned, as the detail fittings are not all interchangeable between types.

Item No.	Description	Part No.
81	CONTENTS GAUGE GASKET	CB-2561-0000
82	CONTENTS GAUGE BOLTS (DUPLEX STAINLESS STEEL & TITANIUM ONLY)	CY-5000-0013
83	CONTENTS GAUGE BOLT (STAINLESS STEEL & WORTINGTON ONLY)	CY-5000-0014
84	CONTENTS GAUGE BOLT THUNDER & COLT (M6 X 25 S/S SOCKET CAP)	CY-0006-3025
86	CONTENTS GAUGE - 45 / 60 LTR	CB-2552-0000
87	CONTENTS GAUGE - 56 / 80 LTR	CB-2553-0000
88	CONTENTS GAUGE DIAL & SCREW	CB-2551-0001
89	80% FIX LIQUID LEVEL (FLL) GAUGE - 45 / 60 LTR	CB-2480-0021
90	80% FIX LIQUID LEVEL (FLL) GAUGE - 44 / 60 LTR (WITH BLANKING NUT)	CB-2480-1021
91	80% FIX LIQUID LEVEL (FLL) GAUGE - 56 / 80 LTR	CB-2480-0022
92	80% FIX LIQUID LEVEL (FLL) GAUGE - 56 / 80 LTR (WITH BLANKING NUT)	CB-2480-1022
95	FLL GAUGE BLANKING PLUG	CB-2483-0000
96	VENT HOSE ASSEMBLY	CB-2482-0000
97	FUELSAFE COUPLING	CB-2482-0001
98	PRESSURE RELIEF DUST PLUG	CT-0250-0004
99	CYLINDER BLANKING PLUG	CT-0250-0013
100	PRESSURE RELIEF VALVE (OMECA)	CB-8412-1000
101	PRESSURE RELIEF VALVE ADAPTOR	CB-8426-0000
102	VAPOUR VALVE - NO PRV - CAMERON	CB-2884-0000
	FOR USE WITH: CB426, CB497, CB599, CB959 & CB2088	
103	VAPOUR VALVE WITH PRV - CAMERON	CB-2896-0000
	FOR USE WITH: CB426, CB497, CB599, CB959 & CB2088	
104	VAPOUR VALVE WITH PRV - THUNDER & COLT / SKY	CB-2883-0000
	FOR USE WITH: V20, V30 & V40	
107	VAPOUR VALVE WITH DIP TUBE (CAMERON TITANIUM CYLINDERS)	CQ-2001-0000
	FOR USE WITH: CB2380S, CB2383S, CB2385S & CB2387S	
108	VAPOUR REGULATOR -SYSTEM - DYNAQUIP	CQ-2000-1000
109	VAPOUR REGULATOR SYSTEM - TEMA	CQ-2000-2000
174	VAPOUR REGULATOR SYSTEM - NO COUPLING	CQ-2000-3000

FUEL SYSTEM - MISCELLANEOUS

IMPORTANT:
A range of different cylinder types exist and it is important to identify the correct type concerned, as the detail fittings are not all interchangeable between types.

Item No.	Description	Part No.
110	SCHROEDER VAPOUR FITTING (MAY ALSO REQUIRE ITEM 173)	CB-2567-0000
111	DYNAQUIP Q.RELEASE SOCKET FOR CALOR FITTING	CT-0341-0001
112	VAPOUR VALVE REPAIR KIT	CT-0901-0002
113	BM VAPOUR - CONE / 'O' RING / SEAL	CB-0614-3022
114	BM VAPOUR - SEALING RING	CB-0614-3160
115	BM VAPOUR - SCREW 244A5050	CB-0614-5050
117	REGO 8180 - LIQUID VALVE COVER	CT-8180-9000
118	REGO 8180 - REPLACEMENT STRAPS	CT-8180-9001
119	REGO 8180 - LIQUID VALVE SPRING	CT-8100-0013
120	REGO 8180 - LIQUID VALVE 'O' RING SET	CB-2621-0000
121	REGO 8180 - LIQUID VALVE MAIN SEAL 'O' RING	CB-2624-0000
122	DESEATING TOOL	CT-8180-8000
123	BM LIQUID VALVE	CB-0824-0001
124	BM LIQUID VALVE SELF SEAL SERVICE KIT	CB-2628-0000
125	BM LIQUID VALVE MAIN SEAL KIT	CB-2629-0000
126	TEMA 3800 SERIES MALE COUPLING	CB-0671-0007
127	TEMA DUST CAP	CH-3800-0006
128	TEMA 1300A PILOT QUICK RELEASE 3/8BSPM	CT-1300-0003
129	TEMA 1300EC FEMALE ¼BSPTM	CT-1300-0007
130	TEMA 3800 FEMALE	CH-3800-0001
131	TEMA 3815 DUST PLUG	CH-3800-0004
132	TEMA 1/8 TO ¼ CONNECTOR	CT-1300-0005
133	3/8BSP DOWTY SEAL	CH-3800-0003
173	SCHROEDER VAPOUR FITTING ADAPTOR (USED WITH ITEM 110)	CB-8425-0000

Not all parts illustrated are held in stock and may have to be ordered especially - Please contact aftersales@cameronballoons.co.uk for any further information or advice.

FUEL SYSTEM - MISCELLANEOUS

FOR INFORMATION REGARDING QUICK SHUT-OFF VALVES ON ALL T&C V20 / V30 / V40 & T&C WORTHINGTONS, PLEASE CONTACT: AFTERSALES@CAMERONBALLOONS.CO.UK

IMPORTANT:
A range of different cylinder types exist and it is important to identify the correct type concerned, as the detail fittings are not all interchangeable between types.

Item No.	Description	Part No.
134	DOWTY SEAL TEMA SOCKET/ADAPTOR	CT-1300-0002
135	DOWTY SEAL TEMA ADAPTOR/REGULATOR	CT-1300-0004
136	TEMA 'O' RING PACK	CB-2631-0000
137	REGO QUICK SHUT OFF PARTS PACKET CONSISTS OF ITEMS: 139, 140, 141, 142, 144 (x 4 UNITS), 145 & 149	CB-0671-2000
138	TEMA QUICK SHUT OFF PARTS PACKET CONSISTS OF ITEMS: 126, 131, 133, 139, 143, 144 (x 4 UNITS), 145 & 148	CB-0671-1000
139	FLANGE ADAPTOR (THREADED)	CB-0437-0001
140	WORCESTER BALL VALVE	CB-0392-0017
141	REGO 7141M 7/8 UNEF THREAD	CB-8407-0000
142	REGO ADAPTOR BLOCK QUICK SHUT OFF	CB-8409-0000
143	TEMA ADAPTOR BLOCK QUICK SHUT OFF	CB-8410-0000
144	M6 X 65 HEX HEAD BOLT	CY-0006-0065
145	QUICK SHUT OFF HANDLE (INC. RED SLEEVE) (SPECIFY LH OR RH)	CB-8416-0000
146	QUICK SHUT OFF HANDLE SLEEVE (RED)	CB-8416-0002
147	WORCESTER VALVE SEAL KIT	CB-0392-0018
148	WORCESTER/TEMA THREADED ADAPTOR	CB-0671-0006
149	7/8 DOWTY SEAL	CB-0671-0004
152	CYLINDER FOAM - 40 / 45 LTR - STAINLESS STEEL / ALUMINIUM	CG-1100-0005
153	CYLINDER FOAM - 60 LTR - STAINLESS STEEL	CG-1100-0006
154	CYLINDER FOAM - 60 LTR - STAINLESS STEEL TALL	CG-1100-0008
155	CYLINDER FOAM - 80 LTR - STAINLESS STELL	CG-1100-0007
163	STAINLESS STEEL COVER (INCLUDING FOAM)	CT-8000-2000
164	STAINLESS STEEL COVER ONLY	CT-8000-3000
165	WARNING LABELS - CYLINDER	CT-2000-0003
166	CYLINDER RING COVER - CAMERON	CB-2198-0001
167	CYLINDER RING COVER - THUNDER & COLT	CB-2198-0002

FUEL SYSTEM - ALUGAS CYLINDERS

FOR FURTHER INFORMATION REGARDING ALUMINIUM FUEL CYLINDERS, PLEASE CONTACT: AFTERSALES@CAMERONBALLOONS.CO.UK

IMPORTANT:
A range of different cylinder types exist and it is important to identify the correct type concerned, as the detail fittings are not all interchangeable between types.

Item No.	Description	Part No.
ALUGAS 50L ALUMINIUM		
81	CONTENTS GAUGE GASKET	CB-2561-0000
86	CONTENTS GAUGE	CB-2552-0000
89	80% FIX LIQUID LEVEL (FLL) GAUGE	CB-2480-0021
90	80% FIX LIQUID LEVEL (FLL) GAUGE (WITH BLANKING NUT)	CB-2480-1021
95	FLL GAUGE BLANKING PLUG	CB-2483-0000
98	PRESSURE RELIEF DUST PLUG	CT-0250-0004
99	CYLINDER BLANKING PLUG	CT-0250-0013
100	PRESSURE RELIEF VALVE (OMECA)	CB-8412-1000
117	REGO 8180 - LIQUID VALVE COVER	CT-8180-9000
156	CYLINDER FOAM	CB-2990-2000
161	CYLINDER COVER (EXCLUDES FOAM)	CB-2990-3000
168	CYLINDER RING COVER	CB-2990-4000
169	LIQUID VALVE (WITH INTEGRAL DIP TUBE)	CB-2992-0000
170	CONTENTS GAUGE, SOCKET HEAD CAP SCREW, M6 X 20	CY-0006-3020

Not all parts illustrated are held in stock and may have to be ordered especially - Please contact aftersales@cameronballoons.co.uk for any further information or advice.

FUEL SYSTEM - WORTHINGTON CYLINDERS

FOR INFORMATION REGARDING QUICK SHUT-OFF VALVES ON WORTHINGTONS, PLEASE CONTACT: AFTERSALES@CAMERONBALLOONS.CO.UK

IMPORTANT:
A range of different cylinder types exist and it is important to identify the correct type concerned, as the detail fittings are not all interchangeable between types.

Item No.	Description	Part No.
WORTHINGTON		
81	CONTENTS GAUGE GASKET	CB-2561-0000
83	CONTENTS GAUGE BOLT	CY-5000-0014
85	CONTENTS GAUGE	CB-2551-0000
89	80% FIX LIQUID LEVEL (FLL) GAUGE	CB-2480-0021
90	80% FIX LIQUID LEVEL (FLL) GAUGE (WITH BLANKING NUT)	CB-2480-1021
95	FLL GAUGE BLANKING PLUG	CB-2483-0000
96	VENT HOSE ASSEMBLY	CB-2482-0000
98	PRESSURE RELIEF DUST PLUG	CT-0250-0004
99	CYLINDER BLANKING PLUG	CT-0250-0013
100	PRESSURE RELIEF VALVE (OMECA)	CB-8412-1000
107	VAPOUR VALVE WITH DIP TUBE (MASTER CYLINDERS)	CQ-2001-0000
108	VAPOUR REGULATOR SYSTEM - DYNAQUIP	CQ-2000-1000
109	VAPOUR REGULATOR SYSTEM - TEMA	CQ-2000-2000
117	REGO 8180 - LIQUID VALVE COVER	CT-8180-9000
123	LIQUID VALVE (CYLINDER DESIGN VARIATION MAY NOT ALLOW INSTALL)	CB-0824-0001
127	TEMA DUST CAP	CH-3800-0006
137	REGO QUICK SHUT OFF PARTS PACKET CONSISTS OF ITEMS: 139, 140, 141, 142, 144 (x 4 UNITS), 145 & 149	CB-0671-2000
138	TEMA QUICK SHUT OFF PARTS PACKET CONSISTS OF ITEMS: 126, 131, 133, 139, 143, 144 (x 4 UNITS), 145 & 148	CB-0671-1000
152	CYLINDER FOAM	CG-1100-0005
168	CYLINDER COVER (PLEASE SPECIFY COLOUR)	CT-8000-1000
169	CYLINDER FOAM & COVER (PLEASE SPECIFY COVER COLOUR)	CT-8000-2000
174	VAPOUR REGULATOR SYSTEM - NO COUPLING	CQ-2000-3000

FUEL SYSTEM - DUPLEX FUEL CYLINDERS

FOR INFORMATION REGARDING DUPLEX FUEL CYLINDERS, PLEASE CONTACT: AFTERSALES@CAMERONBALLOONS.CO.UK

IMPORTANT:
A range of different cylinder types exist and it is important to identify the correct type concerned, as the detail fittings are not all interchangeable between types.

Item No.	Description	Part No.
	COMMON COMPONENTS TO DUPLEX STAINLESS STEEL CYLINDERS	
81	CONTENTS GAUGE GASKET	CB-2561-0000
82	CONTENTS GAUGE BOLT	CY-5000-0013
96	VENT HOSE ASSEMBLY	CB-2482-0000
98	PRESSURE RELIEF DUST PLUG	CT-0250-0004
99	CYLINDER BLANKING PLUG	CT-0250-0013
100	PRESSURE RELIEF VALVE (OMECA)	CB-8412-1000
107	VAPOUR VALVE WITH DIP TUBE (MASTER CYLINDERS)	CQ-2001-0000
108	VAPOUR REGULATOR - DYNAQUIP	CQ-2000-1000
109	VAPOUR REGULATOR - TEMA	CQ-2000-2000
117	REGO 8180 - LIQUID VALVE COVER	CT-8180-9000
123	LIQUID VALVE	CB-0824-0001
127	TEMA DUST CAP	CH-3800-0006
137	REGO QUICK SHUT OFF PARTS PACKET CONSISTS OF ITEMS: 139, 140, 141, 142, 144 (x 4 UNITS), 145 & 149	CB-0671-2000
138	TEMA QUICK SHUT OFF PARTS PACKET CONSISTS OF ITEMS: 126, 131, 133, 139, 143, 144 (x 4 UNITS), 145 & 148	CB-0671-1000
166	CYLINDER RING COVER - **CAMERON**	CB-2198-0001
174	VAPOUR REGULATOR SYSTEM - NO COUPLING	CQ-2000-3000

Not all parts illustrated are held in stock and may have to be ordered especially - Please contact aftersales@cameronballoons.co.uk for any further information or advice.

FUEL SYSTEM - DUPLEX FUEL CYLINDERS

FOR FURTHER INFORMATION ON DUPLEX FUEL CYLINDERS, PLEASE CONTACT: AFTERSALES@CAMERONBALLOONS.CO.UK

IMPORTANT:
A range of different cylinder types exist and it is important to identify the correct type concerned, as the detail fittings are not all interchangeable between types.

Item No.	Description	Part No.
45L DUPLEX STAINLESS STEEL CYLINDER - CB2900		
86	CONTENTS GAUGE	CB-2552-0000
89	80% FIXED LIQUID LEVEL (FLL) GAUGE	CB-2480-0021
90	80% FIXED LIQUID LEVEL (FLL) GAUGE (WITH BLANKING NUT)	CB-2480-1021
157	CYLINDER FOAM	CG-1100-0001
170	CYLINDER COVER	CT-8000-3045
60L DUPLEX STAINLESS STEEL CYLINDER - CB2901		
86	CONTENTS GAUGE	CB-2552-0000
89	80% FIXED LIQUID LEVEL (FLL) GAUGE	CB-2480-0021
90	80% FIXED LIQUID LEVEL (FLL) GAUGE (WITH BLANKING NUT)	CB-2480-1021
158	CYLINDER FOAM	CG-1100-0002
171	CYLINDER COVER (PLEASE SPECIFY COLOUR)	CT-8000-3060
72L DUPLEX STAINLESS STEEL CYLINDER - CB2903		
87	CONTENTS GAUGE	CB-2553-0000
91	80% FIXED LIQUID LEVEL (FLL) GAUGE	CB-2480-0022
92	80% FIXED LIQUID LEVEL (FLL) GAUGE (WITH BLANKING NUT)	CB-2480-1022
159	CYLINDER FOAM	CG-1100-0004
172	CYLINDER COVER (PLEASE SPECIFY COLOUR)	CT-8000-3072

INFLATION FANS

Item No.	Description	Part No.
	2.5HP	
1	2.5HP IMPELLER	CB-8980-0003
2	2.5HP FAN FINGER GUARD	CB-8980-0004
	5.5HP	
3	5.5HP COMPLETE FAN GUARD (FRONT & BACK)	CB-6446-6447
4	5.5HP FAN GUARD (FRONT ONLY)	CB-6446-0000
5	5.5HP FAN GUARD (OLD STYLE)	CF-5000-0006
6	5.5HP FAN HUB	CB-0698-0002
7	5.5HP CARBON FIBRE PROPELLER	CB-6422-0000
8	5.5HP CARBON FIBRE PROPELLER REPLACEMENT KIT	CB-6422-1000
9	5.5HP AIR FILTER	CF-5000-0003
10	5.5HP FAN COOLING IMPELLOR	CF-5000-0004
	8HP	
11	8HP COMPLETE FAN GUARD (FRONT & BACK)	CB-6449-6450
12	8HP FAN GUARD (FRONT ONLY)	CB-6449-0000
13	8HP FAN GUARD (OLD STYLE WITH WIRE CUT OUT)	CF-1300-0006
14	8HP FAN GUARD (OLD STYLE WITHOUT WIRE CUT OUT)	CF-8000-0006
15	8HP FAN HUB	CB-0699-0002
16	8HP FAN COOLING IMPELLOR	CF-8000-0004
17	8HP AIR FILTER	CF-8000-0003
18	8HP CARBON FIBRE PROPELLER	CB-6423-0000
19	8HP CARBON FIBRE PROPELLOR REPLACEMENT KIT	CB-6423-1000
	IF REPLACING A WOODEN PROPELLER WITH A CARBON FIBRE ONE THE APPROPRIATE REPLACEMENT KIT IS REQUIRED	
	13HP	
13	13HP FAN GUARD (OLD STYLE WITH WIRE CUT OUT)	CF-1300-0006
20	13HP FAN HUB	CB-0699-0003
21	13HP FAN COOLING IMPELLOR	CF-1300-0004
22	13HP AIR FILTER	CF-1300-0003
23	13HP CARBON FIBRE PROPELLER	CB-6436-0000
19	13HP CARBON FIBRE PROP REPLACEMENT KIT	CB-6423-1000
	IF REPLACING A WOODEN PROPELLER WITH A CARBON FIBRE ONE THE APPROPRIATE REPLACEMENT KIT IS REQUIRED	
	13HP XL	
24	13HP XL CARBON FIBRE PROPELLER	CB-6424-0000
25	13HP XL FAN GUARD	CB-6144-0000
26	13HP XL FRONT GUARD	CB-6451-0000

Item No.	Description	Part No.
	MISCELLANEOUS	
27	FAN WHEEL	CB-6453-0000
28	FAN GUARD SCREW	CF-5813-0000
29	RUBBER MOUNTS FOR FANS	CF-5000-0007
30	FAN ENGINE MOUNTING BUFFER	CB-6444-0000
31	FAN GUARD BUFFER	CB-6480-0000
32	M6 X 10 SS SET SCREW	CY-0006-0010
33	M6 X 45 BOLT	CY-0006-0045
34	M6 PLAIN WASHER	CY-0006-2008
35	M8 SPRING WASHER	CY-1008-2007
36	M10 SPRING WASHER	CY-1010-2007
37	M6 X 20	CY-0006-0020
38	M6 NYLOC NUTS	CY-0006-1002
39	M8 X 40 HEX HEAD BOLT	CY-1008-0040
40	M8 NYLOC BZP	CY-1008-1002
41	M10 NYLOC BZP	CY-1010-1002
42	M10 PLAIN WASHER	CY-0010-2030
43	M6 X 50 BZP WASHER (WHEEL - MUD) 5.5HP, 8HP & 13HP	CY-1006-2009
44	M6 X 25 BZP WASHER (WHEEL - MUD) 2.5HP	CY-1006-2006

Not all parts illustrated are held in stock and may have to be ordered especially - Please contact aftersales@cameronballoons.co.uk for any further information or advice.

INFLATION FANS

1 CB-8980-0003	2 CB-8980-0004	3 CB-6446-6447	4 CB-6446-0000	5 CF-5000-0006	6 CB-0698-0002	7 CB-6422-0000	8 CB-6422-1000	9 CF-5000-0003
10 CF-5000-0004	11 CB-6449-6450	12 CB-6449-0000	13 CF-1300-0006	14 CF-8000-0006	15 CB-0699-0002	16 CF-8000-0004	17 CF-8000-0003	18 CB-6423-0000
19 CB-6423-1000	20 CB-0699-0003	21 CF-1300-0004	22 CF-1300-0003	23 CB-6436-0000	24 CB-6424-0000	25 CB-6144-0000	26 CB-6451-0000	27 CB-6453-0000
28 CF-5813-0000	29 CF-5000-0007	30 CB-6444-0000	31 CB-6480-0000	32 CY-0006-0010	33 CY-0006-0045	34 CY-0006-2008	35 CY-1008-2007	36 CY-1010-2007
37 CY-0006-0020	38 CY-0006-1002	39 CY-1008-0040	40 CY-1008-1002	41 CY-1010-1002	42 CY-0010-2030	43 CY-1006-2009	44 CY-1006-2006	

Not all parts illustrated are held in stock and may have to be ordered especially - Please contact aftersales@cameronballoons.co.uk for any further information or advice.

aftersales@cameronballoons.co.uk www.cameronballoons.co.uk
tel: +44(0)117 963 7216 fax: +44(0)117 966 1168

CAMERON BALLOONS LTD
St.Johns Street, Bedminster, Bristol, BS3 4NH UK

@ Cameron Balloons Ltd